Hitachi Home-1



3LCD | Lens Shift | < 30 dB Leise

Brief Introduction Beta 2.5	The home cinema Home-1 LCD projector from Hitachi has 700 Ansi lumens, a contrast of 800:1 and a WVGA 854 x 480 resolution. With the lens shift function, the projector can be positioned very freely. An image width of up to 269 cm is possible as the projector has 700 Ansi lumens. However, if there is room light, the picture should be a maximum of 179 cm wide. The projector is very quiet compared to others with 28 decibels of operating noise. On the market since 2003, the model is no longer offered by the manufacturer Hitachi.
Display Type	3 x 0,6" LCD TFT Panel mit MLA WVGA 16/9 Liquid Crystal Display with Micro Lense Array
Ansi-Lumen	Projector: 700 / Screen: 302 Lux (bei 203 cm Screen)
Contrast	Projector: 800:1 full on/off / Screen: 800:1 full on/off
Black Level	Projector: 0,8750 min. Lumen / Screen: 0.379 min. Lumen
Lens shift	Vert.: +/-50% Hori.: +/-25% manuell
Resolution	WVGA 854 x 480 409.920 Pixel SXGA 1280 x 1024 compressed
Video Modes	NTSC, Pal, Secam HDTV 720p und 1080i
Disc Recognition	DVD | HD Blu-ray (komprimiert) | ~~3D Blu-ray~~ | ~~4K UHD Blu-ray~~
Application	Homeciname | Small screen width, rooms with very little ambient light below 100 lumens.
Light Source	130W UHB Lamp Articel Nr.: DT00611
Light Life	2000 h.
Operating Costs	-
Focus	Manual
Zoom	Manual 2,0
Objective	-
Throw Ratio	1,15-2,35:1
Audio	1,0W Mono
Connections	D-sub 15pin in Cinch video in Cinch Stereo inS-Video in 9-pin D-sub connector x 1 RS232C (serial)
Ceiling Mounting	Yes
Power	220W
Size WxHxD	350 x 140 x 285 mm (13,8"x5,5"x11,2") 13,97 L/dm³
Operating Noise	28 / 25 dB in Eco Mode
Weight	3,60 kg / 7,94 lbs.

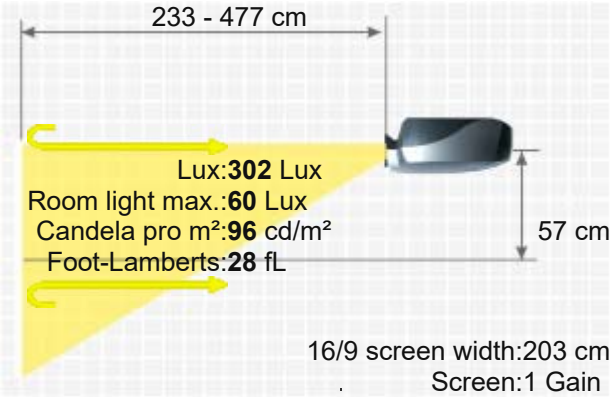





HITACHI HOME-1

Keystone	-
Illumination	-
Frequenz	H-sync: 15,0-61,0 kHz V-sync: 50-120 Hz
Foot-Lamberts	28 fL / max. 269 cm screen width 96 cd/m²
Features	■ Lens shift Funktion manuell ■ Freeze ■ Blank (Black screen button) ■ Eco Mode ■ Kensington Slot ■ Gamma correction ■ Overscan adjustable ■
Please note	Wird nicht in deutschland angeboten.
Status Data	2003 Discontinued (EOL) // Last update of the data: 2023-08-04
More Details	https://www.projector-database.com/pro/hitachihome1-en.html



Due to our ongoing commitment to continuously improve the quality of our projector database, this brochure is also subject to change without notice. HCinema is not responsible for any errors or omissions contained in product descriptions.