Hite Pro 260S



Brief Introduction Beta 2.5	The Hite model Pro 260S is a DLP projector with SVGA 800 x 600 resolution and a contrast of 450:1. An image width of up to 275 cm is possible, as the projector has 1000 Ansi lumens. However, if room light is available, the picture should be max. 183 cm wide. The projector is no longer sold by the manufacturer.		
Display Type	1 x DLP Chip SVGA 4/3 Ti Digital Light Processing Chip		
Ansi-Lumen	Projector: 1000	Screen: 333 Lux (bei 200 cm Screen)	
Contrast	Projector: 450:1 full on/off	Screen: 450:1 full on/off	
Black Level	Projector: 2,2222 min. Lumen	Screen: 0,745 min. Lumen	
Offset	-		
Resolution	SVGA 800 x 600 480.000 Pixel XGA 1024 x 768 compressed		
Video Modes	PAL, SECAM, NTSC		
Application	Standard-Portabel | External training and company presentations, as well as product presentations. Small screen width, rooms with very little ambient light below 100 lumens.		
Light Source	150W Lamp		
Light Life	2000 h.		
Operating Costs	-		
Focus	Manual		
Zoom	Manual 1,32		
Objective	F=2,0-2,3 f=38-50 mm		
Throw Ratio	-		
Audio	1 x 1W		
Connections	D-sub 15pin in Cinch Video in S-Video in Mini Jack USB		
Ceiling Mounting	Yes		
Power	250W		
Size WxHxD	198 x 62 x 243 mm (7,8"x2,4"x9,6") 2,98 L/dm³		
Operating Noise	36dB		
Weight	2,30 kg / 5,07 lbs.		
Keystone	Vert.: +/-16°		
Illumination	85%		
Frequenz	H-sync: 15-100 kHz V-sync: 50-100 Hz		
Foot-Lamberts	31 fL / max. 275 cm screen width 106 cd/m²		
Features	-		
Status	- Discontinued (EOL) // Last update of the data: 2023-08-04		
Data			

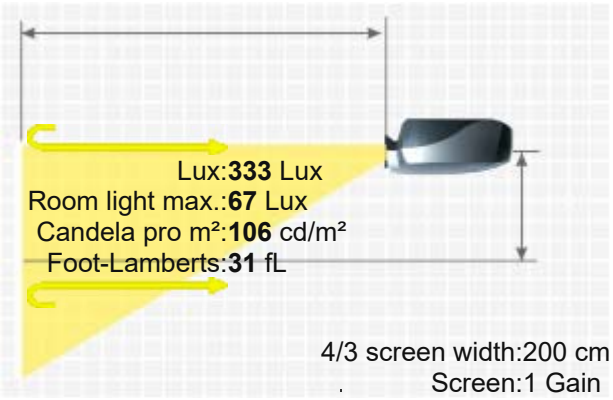

HITE PRO 260S

More Details

HCinema

https://www.projector-database.com/pro/hitepro260s-en.html

Due to our ongoing commitment to continuously improve the quality of our projector database, this brochure is also subject to change without notice. HCinema is not responsible for any errors or omissions contained in product descriptions.