Hite Pro 300X



HITE PRO 300X

Brief Introduction Beta 2.5	The Pro 300X LCD has 1600 Ansi lumens, a contrast of 350:1 and an XGA 1024 x 768 resolution. An image width of up to 348 cm is possible as the projector has 1600 Ansi lumens. However, if room light is available, the picture should be max. 232 cm wide. This model is no longer offered by Hite.
Display Type	2 x 0,9" LCD TFT Panel XGA 4/3 Liquid Crystal Display
Ansi-Lumen	Projector: 1600 / Screen: 533 Lux (bei 200 cm Screen)
Contrast	Projector: 350:1 full on/off / Screen: 350:1 full on/off
Black Level	Projector: 4,5714 min. Lumen / Screen: 1,536 min. Lumen
Offset	-
Resolution	XGA 1024 x 768 786.432 Pixel SXGA 1280 x 1024 compressed
Video Modes	PAL, SECAM, NTSC
Application	Standard-Portabel | External training and company presentations, as well as product presentations. Small screen width, rooms with very little ambient light below 100 lumens.
Light Source	-
Light Life	-
Operating Costs	-
Focus	Manual
Zoom	Manual 1,3
Objective	F=2,0-2,3 f=38-50 mm
Throw Ratio	2,08-2,73:1
Audio	3W
Connections	D-sub 15pin in und out Cinch Video in S-Video in Mini Jack
Ceiling Mounting	Yes
Power	-
Size WxHxD	224 x 109 x 359 mm (8,8"x4,3"x14,1") 8,77 L/dm³
Operating Noise	-
Weight	4,00 kg / 8,82 lbs.
Keystone	Vert.: +/-16°
Illumination	-
Frequenz	-
Foot-Lamberts	50 fL / max. 348 cm screen width 171 cd/m²
Features	-
Status	- Discontinued (EOL) // Last update of the data: 2023-08-04
Data	

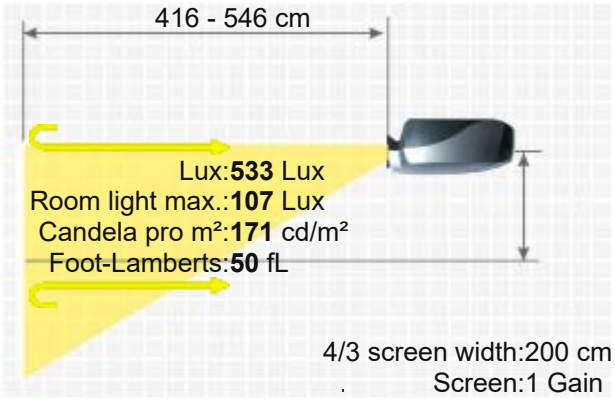

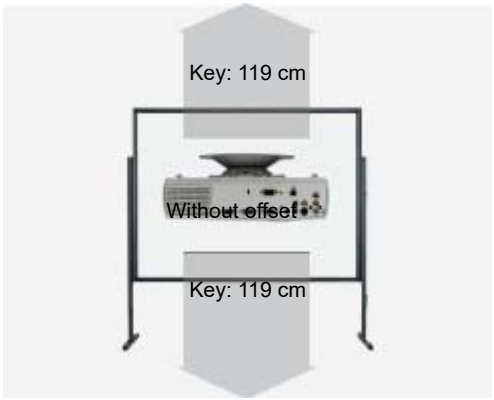

More Details

HCinema

https://www.projector-database.com/pro/hitepro300x-en.html

Due to our ongoing commitment to continuously improve the quality of our projector database, this brochure is also subject to change without notice. HCinema is not responsible for any errors or omissions contained in product descriptions.