InFocus Genesis IN114BBST





Brief Introduction Beta 2.5	The short-throw Genesis IN114BBST 3D BrilliantColor DLP has 3500 Ansi lumens, a contrast of 30000:1 and an XGA 1024 x 768 resolution. The lamp life is specified by the manufacturer as 10000 hours, which converts to over 13.7 years at 2 hours per day. Thanks to the short-throw projection ratio of just 0.621:1, the projector does not stutter in the room. For a 2m wide image, the projector only needs to be 124 cm away from the screen. Even 1080P video signals and 3D are no problem for the projector. With only 30 decibels of operating noise, the model is already very quiet compared to others. Unfortunately, we can no longer offer a replacement lamp for this model, neither original nor replica.
Display Type	1 x 0,55" DMD DLP Chip XGA 4/3 Ti Digital Light Processing Chip
Ansi-Lumen	Projector: 3500 / 2800 im Eco Mode — Screen: 1167 Lux (200 cm Screen width)
Contrast	Projector: 30000:1 — Screen: 30000:1
Black Level	Projector: 0,1167 min. Lumen — Screen: 0,039 min. Lumen
Offset	
Resolution	XGA 1024 x 768 786.432 Pixel
Video Modes	Pal, SECAM, NTSC, HDTV 720p, 1080i, 1080p, 3D, EDTV 480p, 576p
Disc Recognition	DVD | HD Blu-ray (komprimiert) | 3D Blu-ray (komprimiert) | ~~4K UHD Blu-ray~~
3D Compatibility	Frame-Packing (Full HD 3D) |
Application	Short Distance | Medium screen width or rooms with a little more ambient light, max. 200 lumens.
Light Source	203W Lamp Article Nr.: SP-LAMP-105
Light Life	8000 h. / 10000 h. in Eco Mode
Operating Costs	-
Focus	Manual
Zoom	No Zoom
Objective	F=2,7 f=7,15mm
Throw Ratio	0,621:1
Audio	10W Mono
Connections	HDMI 1.4 x2 S-VIDEO x1 D-Sub 15 pin in und out 3.5mm Audio IN and OUT RS232 x1 USB-A x1

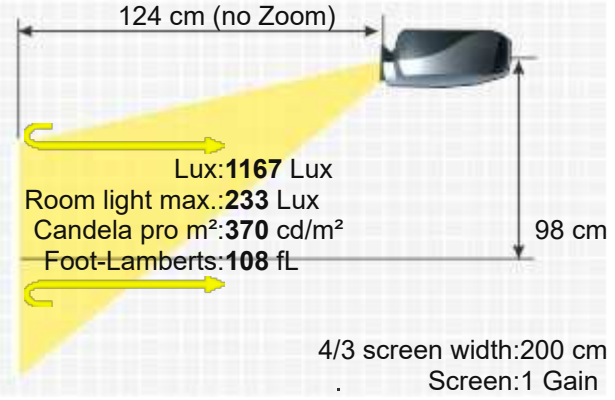

INFOCUS GENESIS IN114BBST



Ceiling Mounting	Yes, is possible.
Power	210/267W
Size WxHxD	236 x 107 x 313 mm (9,3"x4,2"x12,3") 7,9 L/dm³
Operating Noise	30 / 26 dB in Eco Mode

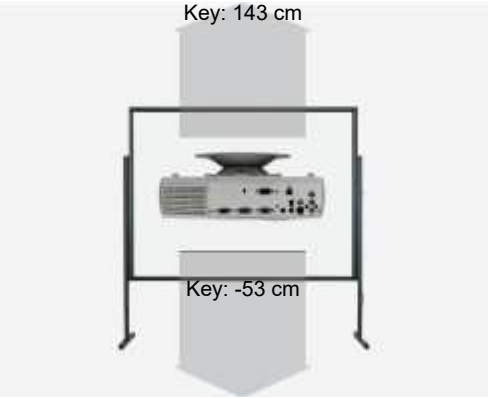

Weight	2,90 kg / 4,41 lbs.
Keystone	Vert.: +/-20°
Illumination	-
Frequenz	H-sync: 31,46-97,5 kHz V-sync: 56-120 Hz
Foot-Lamberts	108 fL / max. 515 cm screen width 370 cd/m²
Features	■ Real Full HD 3D ■ Full HD 1080P compatible ■ Freeze ■ Eco Mode ■ Kensington Slot ■ Digital image shift ■ 24/7 continuous operation capable ■ BrilliantColor™ ■ Optional Wi-Fi network compatible. ■ Short-throw projector ■ DICOM® Simulation Mode
Screen Mirroring	Optional only Chromecast / Fire TV / Apple TV / Mi Box Ads

Optional accessories

	Lampe Ruby	Ruby-LMP9003022	132,66 €
	Lampe Original	SP-LAMP-105	EOL €
	Fernbedienung	Fernb-uni-V3	22,31 €
	Fernbedienung Original	HW-NAVIGATOR-5	27,64 €
	Deckenhalterung 100-120	Halterung100	47,86 €

Status: 2020 Discontinued (EOL) // Last update of the data: 2026-05-05
Created: 2021-04-29 12:23:27

Data: 

More Details: HCinema
https://www.projector-database.com/pro/infocusgenesisin114bbst-en.html

Due to our ongoing commitment to continuously improve the quality of our projector database, this brochure is also subject to change without notice. HCinema is not responsible for any errors or omissions contained in product descriptions.