InFocus IN5142



Brief Introduction Beta 2.5	The InFocus IN5142 LCD projector has 6000 Ansi lumens, a contrast of 3000:1 and an XGA 1024 x 768 resolution. The projector also offers an integrated media player for direct playback of files. The integrated lens shift gives freedom when positioning the projector. The projector will be able to illuminate a picture width of 675 cm well. The projector can create rooms with residual light with a smaller image width, we recommend a maximum of 450 cm here. The model is also Full HD 1080P compatible. Even projection onto the ceiling is possible thanks to the 360Â° projection. This model is no longer offered by InFocus.
Display Type	3 x LCD TFT Panel XGA 4/3 Liquid Crystal Display
Ansi-Lumen	Projector: 6000 / 4800 im Eco Mode — Screen: 2000 Lux (bei 200 cm Screen)
Contrast	Projector: 3000:1 full on/off — Screen: 3000:1 full on/off
Black Level	Projector: 2,0000 min. Lumen — Screen: 0,667 min. Lumen
Lens shift	Vert.: +50% -0% Hori.: +/-10%
Resolution	XGA 1024 x 768 786.432 Pixel WUXGA 1920 x 1200 compressed
Video Modes	Pal, SECAM, NTSC, HDTV 720p, 1080i, 1080p EDTV 480p, 576p **Media player formats:** JPEG (.jpeg, .jpg) Bitmap (.bmp) PNG (.png) GIF (.gif) Movie (.avi, .mov)
Application	Stationary | Permanent installation in the training room and meeting room as well as the conference room. Very large screen width and rooms with plenty of light and shaded daylight.
Light Source	330 / 264W im Eco Mode Lamp Articel Nr.: SP-LAMP-081
Light Life	2500 h. 3000 h. in Eco Mode
Operating Costs	4,27% / 0,14 €
Focus	Powered
Zoom	Powered 2
Objective	F=1,6-2,9 f=24-48 mm
Throw Ratio	1,5-3,0:1
Audio	2 x 8W
Connections	2 x HDMI 1.4 in D-sub 15 pin in und out 5 x BNC RGBHV in YUV in S-Video in Cinch Video in

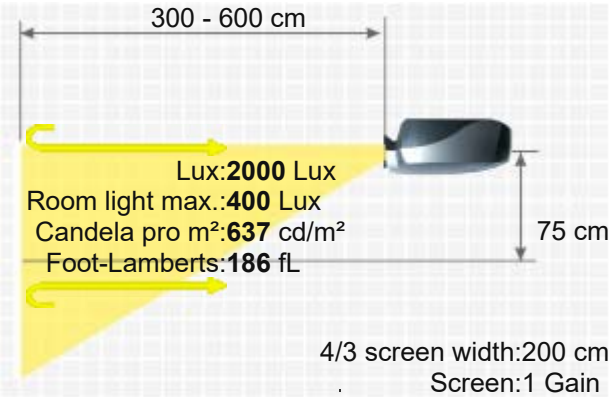

INFOCUS IN5142

	USB Typ A, B in Mini Jack Audio in und out RJ45 in RS232C
Ceiling Mounting	Yes
Power	480W
Size WxHxD	498 x 147 x 476 mm (19,6"x5,8"x18,7") 34,85 L/dm³
Operating Noise	37 / 31 dB in Eco Mode

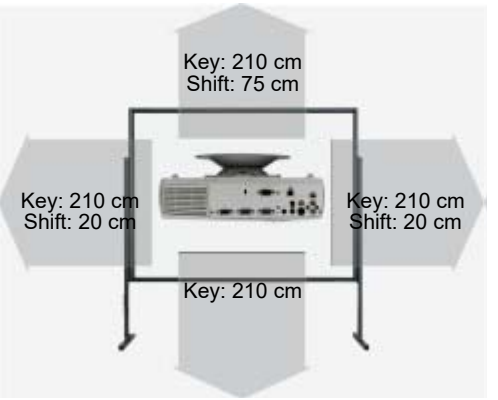

Weight	8,40 kg / 17,64 lbs.
Keystone	Vert.: +/-35° Hori.: +/-35°
Illumination	-
Frequenz	H-sync: 31,5-106 kHz V-sync: 56-120 Hz
Foot-Lamberts	186 fL / max. 675 cm screen width 637 cd/m²

Features

- Full HD 1080P compatible
- Lens shift Funktion
- Integrated Mediaplayer
- Eco Mode
- Kensington Slot
- Dynamic iris
- 360° installable
- 24/7 continuous operation capable
- Password protection
- PJLink™
- Lan network compatible.
- Crestron®-Software compatible.
- DICOM Mode

Optional

Air filter original	UX38241 / SP-FLITER-03
Lamp original	SP-LAMP-081
Object lens original	LENS-073
Object lens original	LENS-072
Object lens original	LENS-071
Object lens original	LENS-070
Object lens original	LENS-069
Remote control original	INFOCUS-IN5132

Order here: https://www.hcinema.de/lampen/shop-en.php?id=fi21004

Optional Lenses

Name	Ratio	Distance	Shift V	Shift H	Zoom
		Zoom Optional Lenses			
LENS-073	4.9-8.3:1	9.8-16.6 m	50-10%	+/-10%	Powered
LENS-072	2.8-4.9:1	5.6-9.8 m	50-10%	+/-10%	Powered
LENS-071	1.5-3:1	3-6 m	50%	+/-10%	Powered
LENS-070	1.5-2.2:1	3-4.4 m	50-10%	+/-10%	Powered
		Fix Optional Lenses			
LENS-069	0.8:1	1.6 m	0.0% Fix		No Zoom

Status 2012 Discontinued (EOL) // Last update of the data: 2023-08-30

Data



More Details

HCinema

https://www.projector-database.com/pro/infocusin5142-en.html

Due to our ongoing commitment to continuously improve the quality of our projector database, this brochure is also subject to change without notice. HCinema is not responsible for any errors or omissions contained in product descriptions.