LITEPRO™

LCD PROJECTION SYSTEM

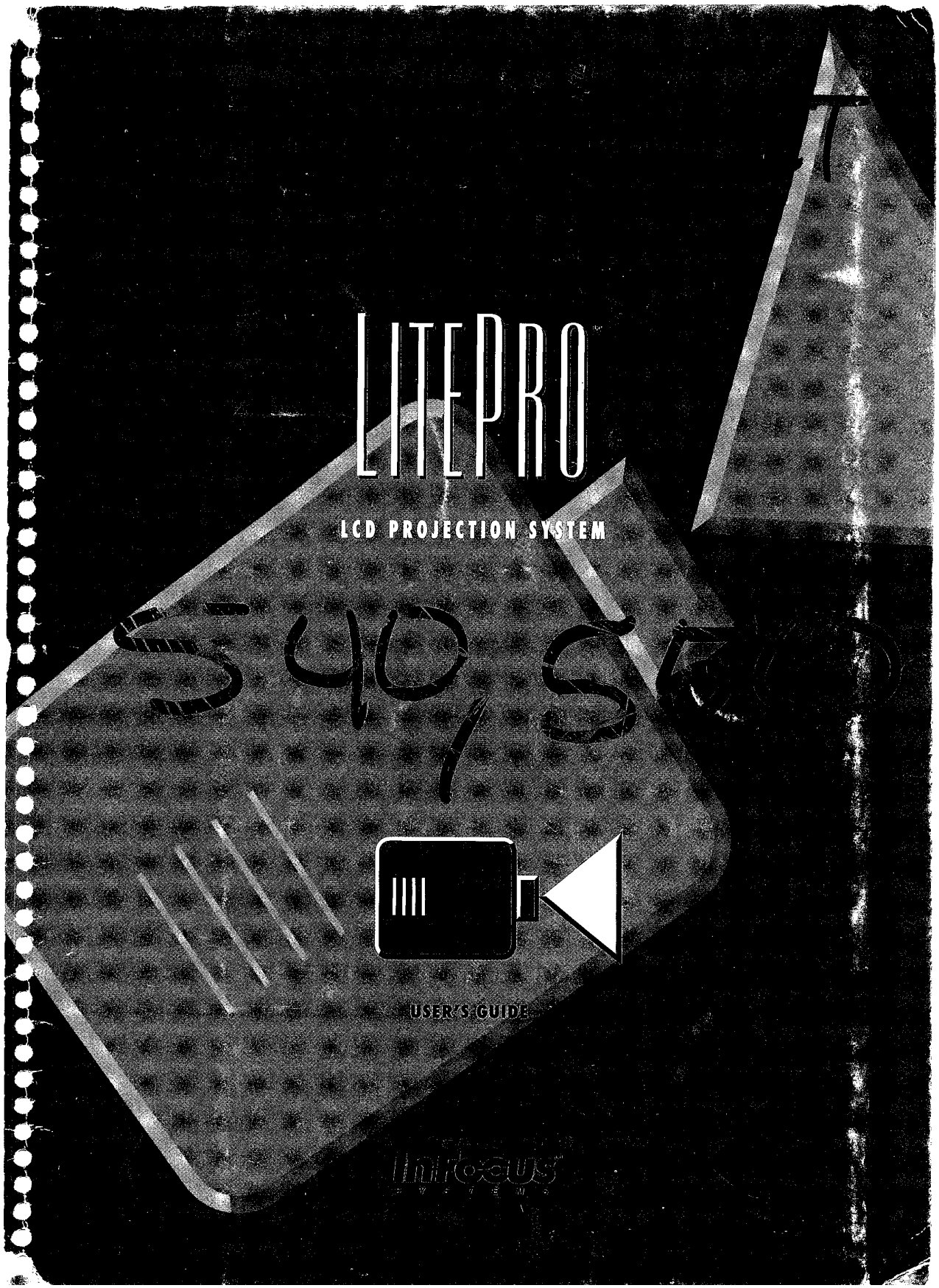

USER'S GUIDE

Infocus™

LITEPRO™

LCD PROJECTION SYSTEM

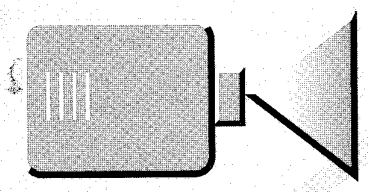

MODELS 540 & 550
USER'S GUIDE

InFocus®
SYSTEMS

FCC Warning

This equipment has been tested and found to comply with the limits for a Class A digital device, pursuant to part 15 of the FCC Rules. These limits are designed to provide reasonable protection against harmful interference when the equipment is operated in a commercial environment. This equipment generates, uses, and can radiate radio frequency energy and, if not installed and used in accordance with the instruction manual, may cause harmful interference to radio communications. Operation of this equipment in a residential area is likely to cause harmful interference in which case the user will be required to correct the interference at his own expense.

Instructions to User

This equipment generates and uses radio-frequency energy and, if not installed and used in accordance with the instruction manual, may cause interference to radio and television reception. It has been tested and found to comply with the limits for a class A computing device in accordance with the specifications in Subpart J of Part 15 of FCC Rules, which are designed to provide reasonable protection against such interference when operated in a commercial environment. If this equipment does cause interference to radio or television reception, the user may try to correct the interference by one or more of the following measures:

- Reorient the receiving antenna for the radio or television.
- Relocate the equipment with respect to the receiver.
- Plug the equipment into a different outlet so the equipment and receiver are on different branch circuits.
- Fasten cables using mounting screws to ensure adequate electromagnetic interference controls.

Acknowledgments

The following are registered trademarks or trademarks of their respective corporations: Apple, Compaq, IBM, Macintosh, Macintosh II, NEC. PC Viewer, PanelBook, IN FOCUS SYSTEMS, and TSTN are registered trademarks or trademarks of In Focus Systems, Inc.

▼ Safety Summary

Please read these instructions before using your projector. Failure to comply with these instructions could result in fire, electrical shock, personal injury, or damage to your projector.

▼ The following terms are used throughout this manual:

Warning:
Warnings indicate procedures to follow or steps to take to avoid personal injury.

Caution:
Cautions indicate procedures to follow or steps to take to avoid damage to your equipment.

Note:
Notes draw your attention to information that is unusual or unexpected.

▼ The following are used on the projector:


ATTENTION - Refer to manual for important safety information.


HOT SURFACE - Do not touch.


FUSE - Refer to manual for important safety information.


NOT A PHONE JACK - Do not connect to a telephone or telephone wall jack. Damage to the LitePro or the phone line could result.

▼ POWER SOURCE
Operate the projector only from a three-wire grounding type power source that does not exceed 250 volts rms between the supply conductors or between either supply conductor and ground.

▼ POWER CORD
Use only the power cord supplied with the projector. Although other power cords might be similar in appearance, they have not been safety tested for use with the projector. Do not use the power cord if it has become damaged or frayed. For a replacement power cord, contact your authorized In Focus Systems dealer.

▼ **GROUNDING**

This projector is grounded through the grounding conductor of the power cord. To avoid electric shock, plug the power cord into a properly wired receptacle. Do not defeat the safety purpose of the grounding type plug.

▼ **FUSE**

For continued protection against risk of fire, use only fuse of correct type, voltage rating, and current rating as specified on the rating label near the fuse holder.

▼ **LAMP**

Replace the projection lamp only with a directly replaceable part; failure to do so can cause overheating or unacceptable image quality. Use only the projection lamp specified in Appendix B.

▼ **HOT SURFACE**

The rear of the projector near the lamp becomes very hot during use. Avoid touching the exhaust grill area of the lamp access door when the projector is in use and let the projector cool for at least twenty minutes before replacing a lamp. When opening the lamp access door, use extreme care to avoid burns from the hot parts inside this area.

▼ **VENTILATION/OVERHEATING**

Slots and openings in the cabinet provide ventilation and protect the projector from overheating. Keep loose papers or other objects well away from the sides and back of the projector. Never operate the projector with the lamp access door open or ajar. This disrupts the cooling airflow inside the unit and can cause overheating. Do not put the projector on top of or beside your computer or any other heat-producing equipment.

▼ **LIQUID SPILLS**

Do not set drinks or other liquids on top of the projector. Spilled liquids can flow inside the projector and cause damage.

▼ **DO NOT DISASSEMBLE**

The only user-serviceable parts inside the projector are the projection lamps inside the lamp access door at the rear. Do not attempt to open any other part of the projector. All service must be performed by an authorized service technician.

▼LitePro Quick Start

To quickly setup the LitePro, follow whichever of these steps apply. This procedure assumes that you are experienced in setting up and connecting computer and video equipment. Be sure you have read the *Safety Summary.* For more details, see Chapter 2 of the *LitePro User's Guide.*

1. Place the projector on a flat surface within reach of a power source, the computer, and the video and audio sources.
2. Connect the projector to your computer. Refer to the drawing on the right that matches your system.
3. Connect the projector to any external video source, audio source, or microphone.
4. Turn on power to the computer monitor, the projector, any attached external video source, audio source, microphone, and the computer.

   The image from the first active source should be projected onto the screen. If no image appears, see Chapter 5 of the *LitePro User's Guide.*
5. Adjust the height of the projector and focus the image by rotating the lens.
6. Press the SELECT button on the remote control to switch sources. Use the VOLUME +/- on the remote control to adjust the volume.
7. To make changes in the Menus:
   - Press the MENU button to cycle through the available menus.
   - Press the LEFT or RIGHT arrow buttons to select a menu item.
   - Press the UP or DOWN arrow buttons to change the setting of the selected item.
   - Press ESC to exit the menus at any time.

For more information about menu functions, see Chapter 3 of the *LitePro User's Guide.*

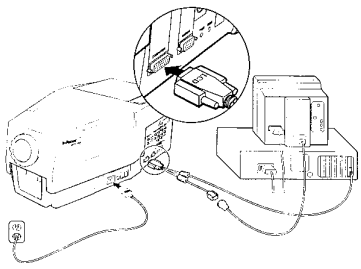

Connecting to a Desktop Computer (see page 2-4)

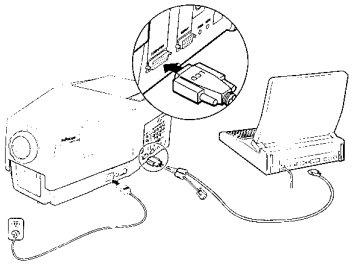

Connecting to a Laptop Computer (see page 2-6)

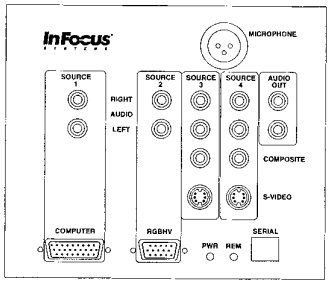

Connectors on the LitePro 550 (see page 2-2)

Contents

Safety Summary

LitePro Quick Start

Introduction

Unpacking Instructions 1-1
About Your Projector 1-2
Accessories and Related Products 1-2
About This Manual 1-3
Terms and Conventions 1-4

Set-Up Instructions

Placing the Projector 2-1
Side-Panel Connectors 2-2
Connecting to a Computer 2-3
- To an IBM-Compatible Desktop Computer 2-4
- To a Macintosh II-Style Desktop Computer 2-5
- To an IBM-Compatible Laptop Computer 2-6

Connecting to a Video Source 2-7
Connecting to an Audio Source 2-10
Connecting to a Microphone 2-11
Connecting to an External Sound System 2-12
Powering On the Equipment 2-13
Powering Off the Equipment 2-14
Setting Up to Use LiteShow 2-15

Using the LitePro

General Procedures 3-2
- Using the Remote Control 3-2
- Controlling the Operating Mode 3-3
- Moving through the Menus 3-4
- Selecting the Defaults 3-4

Controlling the Image 3-5
- Adjusting the Height 3-5
- Focusing the Image 3-5
- Switching the Projection Lamps 3-5
- Adjusting the Brightness 3-6
- Adjusting the Tint 3-7
- Centering a Partial Image 3-7
- Selecting the Sync Setting 3-7

Controlling the Colors 3-8
- Adjusting the Colors 3-8
- Selecting the Color Palette 3-8

Using the LitePro, Cont.

Inverting the Colors 3-9
Clearing the Projection Screen 3-9
Controlling the Audio 3-10
Adjusting the Volume 3-10
Adjusting the Bass and Treble 3-11
Adjusting the Balance Between Channels 3-11
Adjusting the Fade 3-11
Locking Audio Off or to a Source 3-12
Muting the Audio 3-12
Filtering the Audio 3-13
Selecting the Microphone 3-13
Controlling the Video and Graphics 3-14
Selecting the SOURCE 3-14
Freezing the Image (Pausing) 3-15
Adjusting the Text Mode and Pixel Slice 3-15
Selecting PAL, SECAM, or NTSC Video 3-16
Controlling Video Compression 3-16
Setting the Auto Level 3-17
Adjusting the Tracking 3-17
Graphics Information 3-18
Setting the Options 3-19
Selecting the Menu Language 3-19
Selecting Rear Projection 3-19
Displaying the Source Prompt 3-20
Disabling the Test Pattern 3-20
Enabling & Disabling the RS-232 Port 3-21
Setting Auto Standby 3-21
Selecting the PROG Function 3-22

Maintenance Instructions

Cleaning the Projection Lens 4-1
Replacing the Projection Lamps 4-2
Replacing Batteries in the Remote Control 4-4
Replacing the Fuse 4-4

Troubleshooting Guide

If You Need Assistance 5-4

Appendixes

A. Buttons & Menus A-1
B. Specifications & Accessories B-1
C. Graphics & Video Standards C-1
D. Portable & Laptop Activation Chart D-1

Index

Introduction

Unpacking Instructions

Handle your In Focus Systems® LitePro projector carefully as you remove it from the shipping box. The projector comes with the parts shown below. Check to make sure all parts are included in the shipping box. If any are missing, contact your dealer immediately.

If your projector was purchased with the LiteShow option two 3.5" disks and the *LiteShow User's Guide* are also included. For information on working with the LiteShow option, refer to the separate *LiteShow User's Guide.*

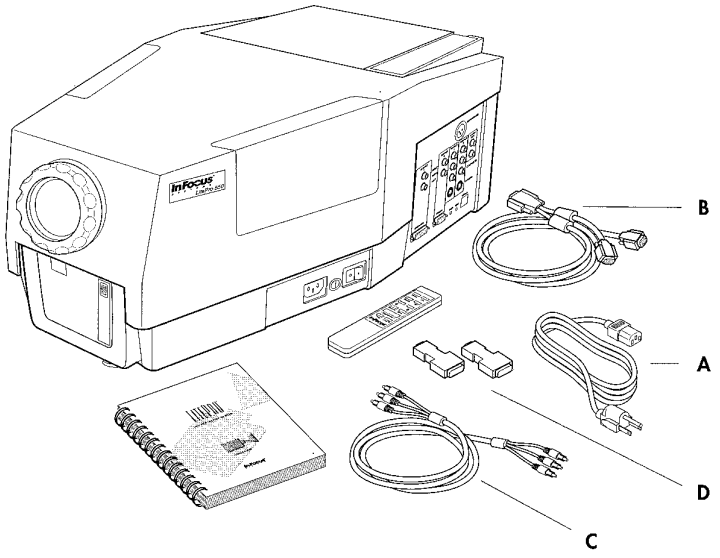

LitePro projector (LitePro 550 shown)

User's Guide

Remote control

A. Power cord

B. 15-pin VGA cable

C. Composite video/ audio cable with RCA connectors (Model 550 only)

D. 15-pin Macintosh II adapters (set of two)

Soft carrying case (not shown)

Spare fuse (not shown)

Two lamps (not shown)

Lens cover (not shown)

After you've unpacked the LitePro projection system and found all the parts, you're ready to set up the system. Ensure that the lamps have been installed (See Chapter 4 *Replacing the Projection Lamps*). At this point you have two options:

1. If you're in a hurry and you're experienced at setting up presentation systems, you can use the *LitePro Quick Start* procedure at the front of this manual. If you encounter any difficulty in setting up the system, return to the information in this chapter. Be sure to read the *Safety Summary* before you begin.
2. If you prefer to follow step-by-step instructions use the procedures in Chapter 2.

About Your Projector

The In Focus Systems® LitePro 540 and 550 projectors are portable, state-of-the-art multimedia presentation systems. Each LitePro projector is designed for convenience. It replaces bulky, complex and fragile presentation systems with a stand-alone projector that is portable, easy to use and durable.

Place your LitePro on a tabletop and connect it to your computer's graphics port with one of the computer-connection cables. The graphics data displayed on the computer's monitor is now projected in full color on your screen. The LitePro projectors are compatible with IBM personal computers (and their compatible counterparts), and Macintosh II-style computers.

In addition, the LitePro 550 projectors are fully compatible with worldwide video standards, including NTSC, PAL, and SECAM. Now your presentation can switch back and forth between computer-generated graphics and full-motion video and animation. There are three independent video input connectors each with its own audio channel. These allow you to connect up to three different video sources which you can control to create vibrant and exciting presentation events. A fourth audio connector that is linked to the computer's input allows you to connect to the audio output jack of a cassette player, an MPC sound card, a CD-ROM unit, or your computer.

If your LitePro projector is equipped with the LiteShow option, you can give a presentation directly from the projector's built-in LiteShow module without the need to connect a computer.

Accessories and Related Products

LitePro accessories make it easy to connect your LitePro projector to a wide variety of computer and video systems. See Appendix B for a listing of the cables, adapters, and other accessories available for use with the LitePro projectors.

LiteTools presentation management software increases the power and convenience of your LitePro. Using LiteTools on your PC or Macintosh you create, edit, and preview a presentation. Presentation developers in your office can cost-effectively develop LiteShow II presentations directly on their PC's. Your LiteTools presentations play on any LS equipped In Focus product.

About This Manual

This manual gives you instructions for setting up, using, and maintaining your LitePro projector. Here's a quick look at the contents of each chapter:

- **Chapter 1** contains the introductory material you are now reading. Be sure to read the *Safety Summary* at the front of this manual before you proceed with the instructions in Chapter 2.
- **Chapter 2** shows you where to position the projector for a presentation; how to connect the projector to the computer, how to connect the 550 projector to a video source, how to connect the 550 projector to an audio source, a microphone, and external speakers; the sequence to use when powering on the projector and its connected equipment; and how to present a show with the LiteShow option of the LitePro projector.
- **Chapter 3** describes how to use the projector during a presentation. This chapter explains how to adjust the height of the projector, focus the projector, control the operating mode of the projector, control the video and graphics, control the audio, switch the projection lamps, and adjust the projected colors.
- **Chapter 4** presents step-by-step instructions for maintaining the projector in good operating condition. This chapter shows you how to clean the projection lens, replace the projection lamps, replace the batteries in the remote control, and replace the power-supply fuse.
- **Chapter 5** contains troubleshooting guidelines. Check the suggestions in this chapter if you are having a problem with the projector.
- **Appendix A** describes the projector's modes, buttons, and menus. Check the tables in this chapter to learn what effect a particular control has on the operation of the projector.
- **Appendix B** lists the projector's specifications and accessories.
- **Appendix C** describes the compatible video standards and computer-graphics formats.
- **Appendix D** lists the commands available for controlling IBM-compatible portable and laptop computers.

Terms and Conventions

Graphics versus video versus images. The terms *graphics*, *video*, and *images* are often used interchangeably in the context of computers. Because this manual describes the conversion of computer graphics data and video data to projected images, it is important to distinguish among the three terms. *Graphics* refers to any visual elements, including text characters, that are displayed on your computer's monitor. *Video* refers to the electronic signals that produce moving visual elements on a television, VCR, or video projector such as the LitePro projectors. *Image* refers to the visual information projected by the LitePro, regardless of the source of that image.

Graphics ports and display cards. Your computer's *graphics port* is the connector on the back of the computer where the monitor is plugged in. This is the same connector you use to connect the projector (after unplugging the monitor cable) to receive graphics data for conversion into projected images. Some computers have more than one graphics port.

IBM and compatible computers. To simplify the wording throughout this manual, IBM personal computers and all compatible computers manufactured by other companies are called *IBM-compatible computers.*

Macintosh Classic-style computers. Macintosh Classics and all older Macintosh computers with built-in monitors are called *Macintosh Classic-style computers* in this manual. This includes the Macintosh, Macintosh Plus, Macintosh SE, Macintosh SE/30, and Macintosh Classic.

Macintosh II-style computers. Macintosh II computers and all Macintosh II based computers are called *Macintosh II-style computers* in this manual. This includes the Macintosh II series, the Quadra series, the Centris series, the Performa series, and PowerBooks with video output.

▼ Set-Up Instructions

Placing the Projector

The projector can be set for either front or rear projection. When shipped from the factory the projector is set for front projection. In either case, the distance from the projector's lens to the projection screen determines the size of the projected image, as shown.

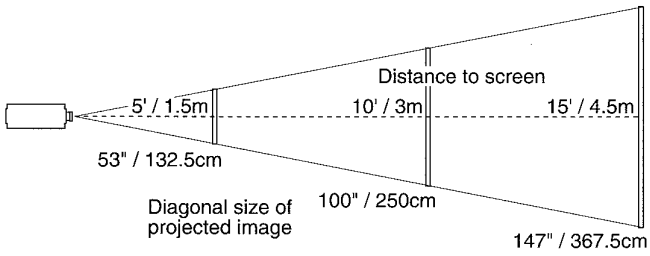

To place the projector:

1. Place the projector on a flat surface, such as a tabletop, in a location that gives you easy access to the projector, a power source, the computer, and your video and audio sources. In general, make sure that the projector is:
   - Within six feet of the power source.
   - Within six feet of the computer.
   - Within nine feet of the video and audio source(s).
2. Orient the projector either with the lens facing the front of the projection screen or with the lens facing the back of the rear-projection screen.
3. Remove the lens cover and store it in a safe place.
4. Plug the power cord first into the projector and then into the power source. (Do not turn on the projector at this time.)

Warning:

Always use the power cord that was shipped with the projector. The projector accepts power from 110 VAC to 240 VAC, 50 or 60 Hz, three-wire type grounded sources. When disconnecting the projector, always remove the power cord from the power source first, then from the projector.

Side-Panel Connectors

These illustrations show the connectors and indicators on your LitePro's side panel. Refer to the figure for your LitePro when connecting the projector.

LitePro 550 side panel

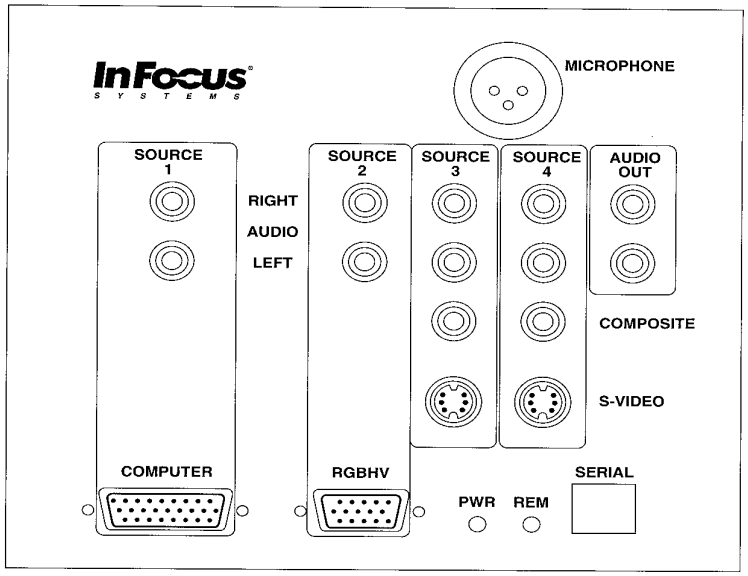

LitePro 540 side panel

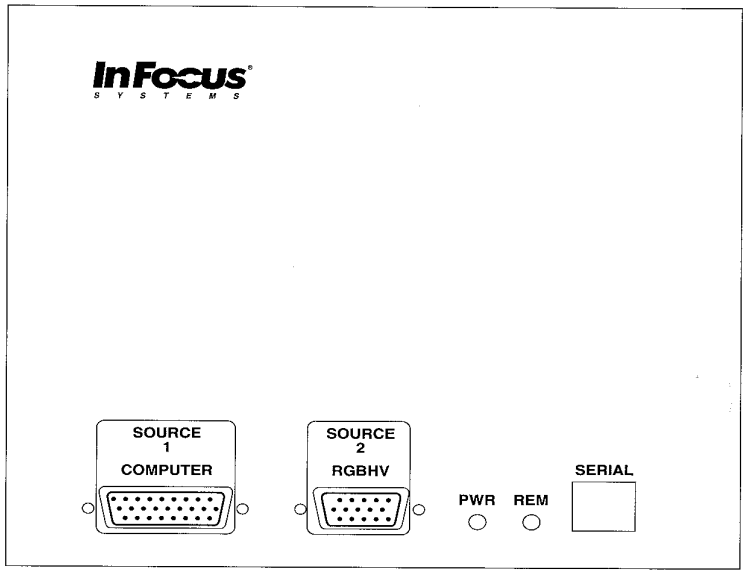

Connecting to a Computer

The images to be projected by the LitePro are usually generated by an attached computer source. To use computer-generated graphics as your projected images, you need to connect the projector to the computer that supplies the graphics for your presentation. This section describes how to connect your projector to the computer.

Note:

To use LiteShow for a presentation, you do not need to connect the LS-equipped LitePro projector to a computer. Instead, follow the instructions given later under "Setting Up to Use LiteShow."

Once you have placed the LitePro, you are ready to connect the projector to your computer. The basic steps are:

1. Plug the 26-pin connector of the Y-cable (labeled LCD on the connector) into the COMPUTER port on the projector.
2. Turn off the computer and the monitor.
3. Unplug the monitor cable from the computer's graphics port.
4. **For Macintosh II style computers only:** Plug one Macintosh adapter into the Y-cable connector labeled MONITOR; plug the other Macintosh adapter into the Y-cable connector labeled VGA. You can now connect the Y-cable with attached adapters as described next.
5. If you are using a monitor, plug the short end of the Y-cable (labeled MONITOR) into the monitor cable.
6. Plug the long end of the Y-cable (labeled VGA) into the computer's graphics port.
7. Tighten the thumb screws on all connectors to ensure solid connections. (Do not turn on the projector yet.)

The following three sections illustrate this connection procedure for three types of computers. Refer to the section that matches your computer.

Connecting to an IBM-Compatible Desktop Computer

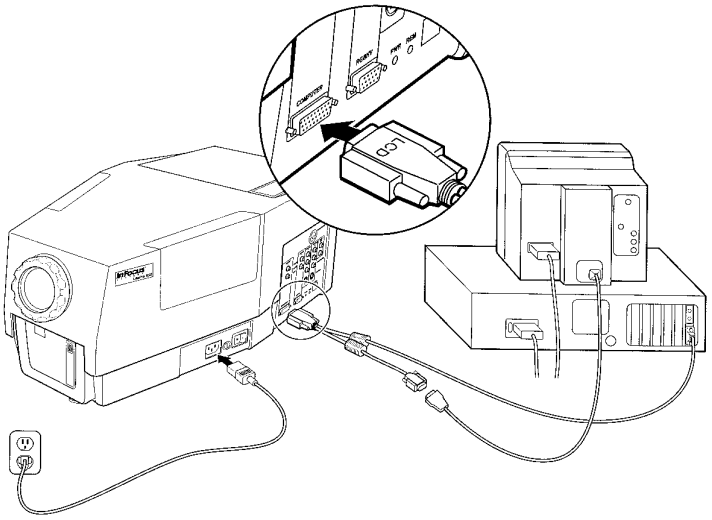

1. Plug the Y-cable connector labeled LCD into the LitePro's COMPUTER port.
2. Attach the Y-cable connector labeled MONITOR to the computer's monitor cable.
3. Plug the Y-cable connector labeled VGA into the computer's graphics port.
4. Plug the power cord into the projector's POWER connector, then into a grounded type AC outlet.

Note:

The LitePro is not compatible with EGA/CGA graphics modes.

Connecting to a Macintosh II-Style Desktop Computer

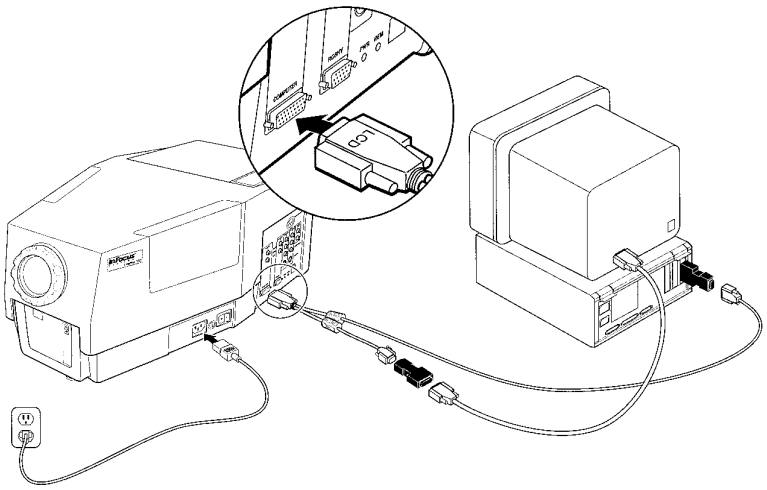

1. Plug one Mac II adapter into the Y-cable connector labeled MONITOR. Plug the other Mac II adapter into the Y-cable connector labeled VGA.
2. Plug the Y-cable connector labeled LCD into the LitePro's COMPUTER port.
3. Attach the Y-cable connector labeled MONITOR to the computer's monitor cable.
4. Plug the Y-cable connector labeled VGA into the computer's graphics port.
5. Plug the power cord into the LitePro's POWER connector, then into a grounded-type AC outlet.

Macintosh PowerBook computers with video out cables can be connected to the LitePro projector. If your PowerBook does not include the video out cable, contact your computer dealer for availability of third-party adapters.

Note:

The LitePro is not compatible with Macintosh Classic-style computers.

Connecting to an IBM-Compatible Laptop Computer

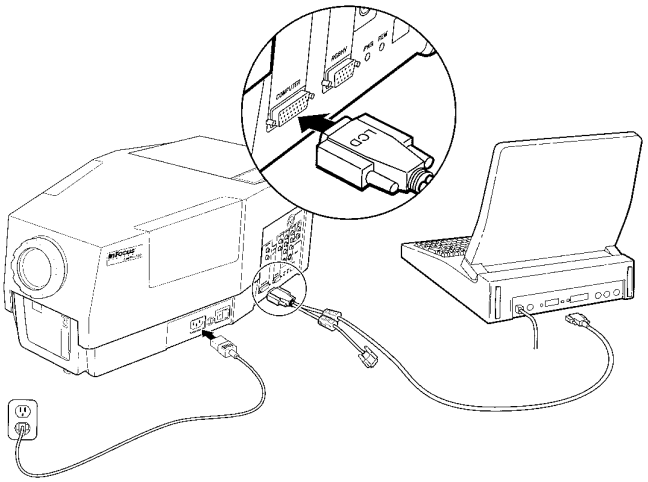

Caution:

The LitePro is not compatible with the Macintosh laptop. Do not attempt to connect the LitePro to a Macintosh laptop. Serious damage to the computer or the LitePro could result. The LitePro is compatible with Macintosh PowerBooks. Refer to the previous page for more information.

1. Plug the Y-cable connector labeled LCD into the LitePro's COMPUTER port.
2. Plug the Y-cable connector labeled VGA into the computer's graphics port.
3. If you have an external (separate) monitor connected to your laptop computer, attach its cable to the Y-cable connector labeled MONITOR. Otherwise, the short end of the Y-cable is not connected to anything.
4. Plug the power cord into the LitePro's POWER connector, then into a grounded-type AC outlet.

When the external graphics port is activated on some laptop computers they automatically turn off their internal display. See Appendix D or your laptop computer manual for the commands available for controlling the laptop computer.

Connecting to a Video Source

LitePro 550 projectors are equipped with three input connectors that deliver a video signal to the projector: Two of the input connectors, SOURCE 3 and SOURCE 4, present either composite or S-Video. The third input connector, SOURCE 2, presents RGBHV video. A composite video/audio cable is supplied with the LitePro 550 that allows you to connect one video source (and its corresponding audio signals) to one of the projector's video-signal input connectors.

Caution:

To avoid damage to the video source, you cannot simultaneously connect the composite video signal and the S-Video signal to the same SOURCE connector of the LitePro.

After connecting your LitePro to the video source(s), see the instructions given under *Controlling the Video* in Chapter 3.

When a composite video signal is connected, the LitePro 550 automatically detects the type of connected video at the two RCA-type video input connectors of SOURCE 3 and SOURCE 4. By default, the projector expects an NTSC video signal at these connectors. However, upon detecting a PAL or SECAM source, the projector by default selects PAL. In order to set the projector for a SECAM video signal or to change the video mode of the projector, follow the instructions given under *Selecting PAL/SECAM or NTSC Video* in Chapter 3.

The projector automatically expects a S-Video signal at an S-Video input connector of either SOURCE 3 or SOURCE 4. For short cable runs, the S-Video signal is higher in quality than a composite video signal. Use the cable supplied with the video source to connect the LitePro 550 to an S-Video source.

To connect a video source to the LitePro:

1. Locate the connector on your VCR, laser disc player, camcorder, or other video source that is labeled Video Out, To Monitor, or something similar. For a composite video source, this is an RCA type connector; for a S-Video source, this is a round, four-pin S-Video connector.

Connecting a Composite Video source.

Plug into either Source3 or Source4.

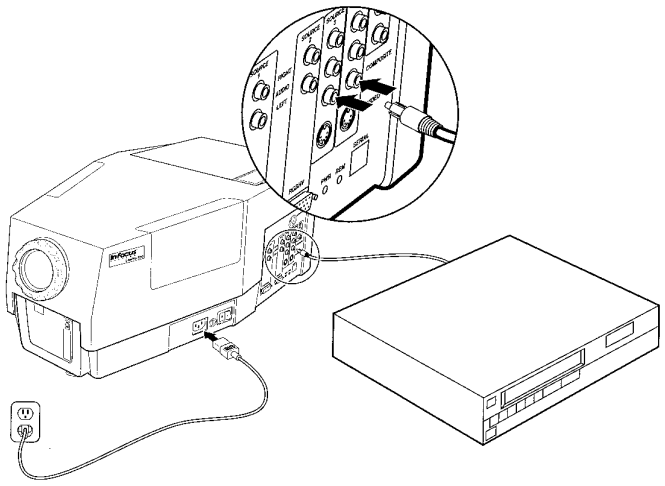

Note:

Your video source may also have a Video Out connector that accommodates a cable TV-style F connector. Do not use this to connect to the LitePro 550. This connector is larger than the RCA connector and is meant to attach to coaxial cable with a threaded connector and a fine inner wire.

2a. To connect a composite video signal, insert the yellow RCA plug of the composite video/audio cable into the LitePro's SOURCE 3 or SOURCE 4 composite connector. Insert the yellow RCA plug at the other end of the cable into the Video Out connector of your video source.

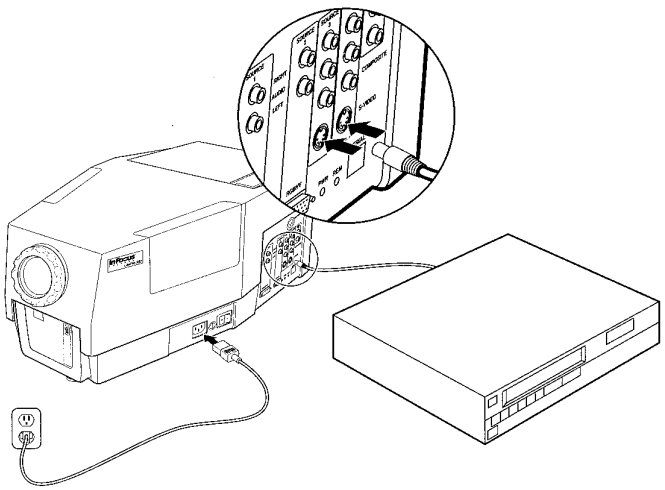

Connecting an S-Video source.

Plug into either Source3 or Source4.

2b. To connect a S-Video signal, insert one plug of the S-Video cable into the LitePro's SOURCE 3 or SOURCE 4 S-Video connector. Insert the plug at the other end of the cable into the S-Video Out connector of your video source.

Connecting to an Audio Source

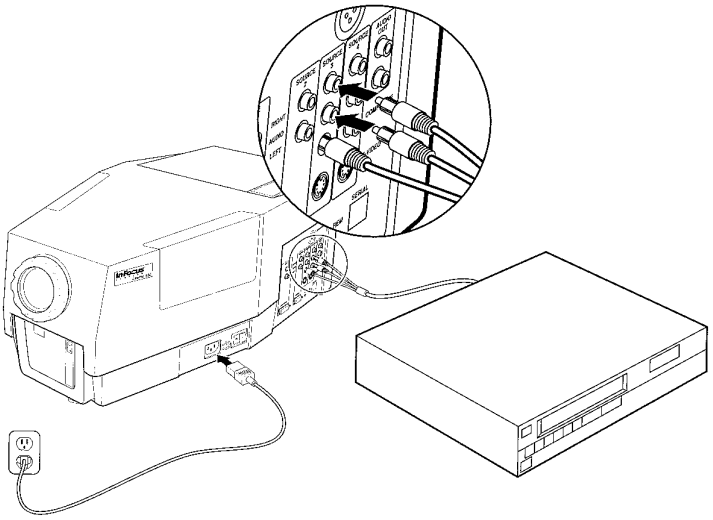

LitePro 550 projectors have four pairs of audio input connectors: three pairs of the audio input connectors present stereo sound from each of the three possible video sources, the fourth pair of audio input connectors allows you to present the sounds created by the attached computer. A composite video/audio cable is supplied with the projector that allows you to connect one audio source to one pair of the projector's audio input connectors.

To connect a stereo audio source to the LitePro:

1. Connect one side of the composite video/audio cable between the Audio Out jack of the video source and the corresponding speaker jack of the desired AUDIO connector of the LitePro. The top AUDIO jack of the LitePro controls the right speaker, the bottom AUDIO jack controls the left speaker.
2. Connect the other side of the composite video/audio cable between the other Audio Out jack of the video source and the corresponding speaker jack of the AUDIO connector of the LitePro.

To connect a monophonic source to the projector, connect the audio cable from the audio source to the left AUDIO (white) jack of the appropriate SOURCE.

Connecting to a Microphone

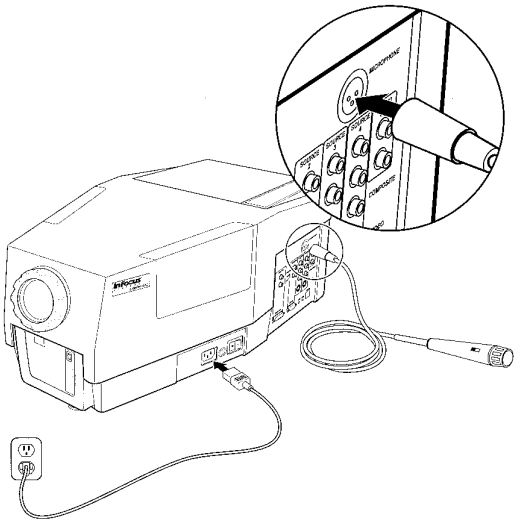

To connect a microphone to the LitePro 550, insert the plug at the end of the microphone's cable into the MICROPHONE jack on the LitePro.

A low-impedance microphone can be connected directly to the projector. When you are using a high-impedance microphone, you must insert an impedance-matching adapter (a transformer) between the microphone and the projector. The sound quality is reduced when you use a high-impedance microphone.

Note:

The LitePro 550 does not supply pass-through (phantom) power for condenser-type microphones.

Connecting to an External Sound System

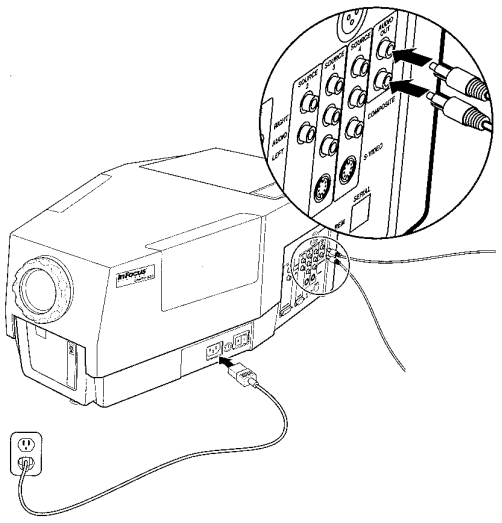

You can use an external public address (PA) system or an external self-amplified speaker system to amplify the sounds of your presentation.

To connect the LitePro to an external sound system, use an RCA-to-RCA cable for each speaker.

1. Insert one RCA plug of the stereo cable into the AUDIO OUT jack on the projector.
2. Insert the other plug into the corresponding Audio In jack of the external sound system.

The top AUDIO jack of the LitePro controls the right speaker; the bottom AUDIO jack control the left speaker.

Powering On the Equipment

The order in which you turn on the equipment is important. We recommend that you always turn on the LitePro and its attached equipment in the following sequence:

1. The computer monitor
2. The LitePro projector
3. Any attached video source (550 only)
4. Any attached audio source (550 only)
5. Any attached external sound system (550 only)
6. Any attached microphone (550 only)
7. The computer

The figure on the following page shows the location of the power switch and power indicator. During normal operation, when the power switch is in the On (1) position, the power indicator is lit, the projection lamp is on, and the cooling fans are on. However, if the projector fails to detect a video signal within a selectable preset amount of time, the LitePro switches into Standby mode. In Standby mode, the projection lamp is off, the fan is on and the power indicator flashes. If the projector remains in Standby mode for more than two minutes, the fans automatically turn down. The projector leaves Standby mode as soon as it detects a signal at a video connector or when it's On/Off button is pressed.

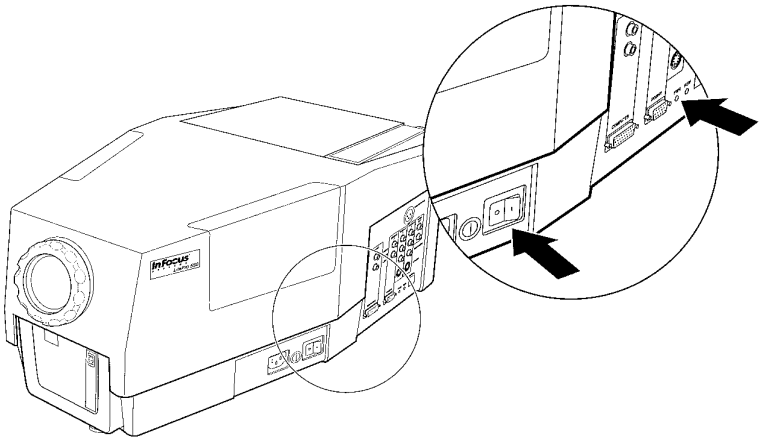

Location of the power switch and power indicator.

To power on the projector and its attached equipment:

1. Turn on the computer monitor, the computer, and the projector in the sequence given previously. After five seconds, the projected image or the test-pattern image should be projected onto the screen. If no image appears, follow the *Troubleshooting Guide* instructions given in Chapter 5. If you are using a laptop computer and are not getting a test pattern, see the laptop commands given in Appendix D.
2. If necessary, perform *Adjusting the Height* to make sure that the projected image is positioned correctly on the projection screen and perform *Focusing the Image* to make sure that the projected image is clear and readable on the projection screen. (These procedures are given in Chapter 3.)

Your LitePro is now setup and ready to use. Refer to the procedures in Chapter 3 for more information about how to use your LitePro.

Powering Off the Equipment

Turn off the projector by pressing the On/Off button on the remote control. The cooling fans continue to run at full speed, allowing the projector to cool. After a few minutes, power off the projector using the power switch on the side of the LitePro.

Setting Up to Use LiteShow

If your LitePro is equipped with LiteShow, you do not need to connect the projector to a computer in order to give a presentation.

1. Perform *Placing the Projector, Adjusting the Height,* and *Focusing the Image.*
2. Insert your presentation disk in the disk drive on the LitePro. The amber light on the disk drive lights up as the disk is read.

   When you turn on the LiteShow by inserting a disk into the projector the first time after the projector is powered on, the system file is loaded from the disk. To use the LiteShow, you must start either with a disk that has a show on it or with a disk that has already been formatted by LiteShow.

Caution:

Never remove a disk from the drive when the amber light on the disk drive is lit.

If the presentation is set for timed advance, it starts automatically. Refer to *Presenting a Show* in the separate *LiteShow User's Guide* for additional information on LiteShow.

▼ Using the LitePro

This chapter presents step-by-step procedures for the tasks performed with the LitePro projector.

General Procedures describe how to use the remote control, how to move between the projector's primary operating modes, how to move through the menus, and more.

Controlling the Image explains how to adjust the height, adjust the brightness, and more.

Controlling the Colors explains selecting the color palette, inverting the colors, clearing the projection screen, and more.

Controlling the Audio describes adjusting the volume, muting the audio, selecting the microphone, and more.

Controlling the Video describes selecting the source, freezing the image, selecting PAL or SECAM, and more.

Setting the Options describes select rear projection, disabling the test pattern, and more.

Selecting the PROG Function describes how to activate the programmable button on the remote control.

▼General Procedures

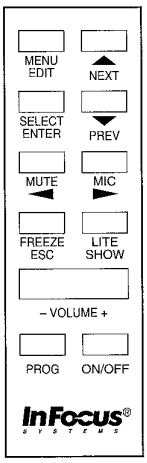

LitePro 550 Remote

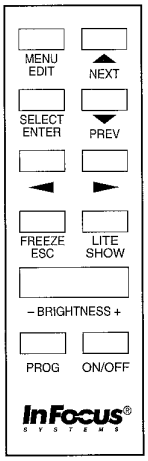

LitePro 540 Remote

Using the Remote Control

The remote control is the primary way to control the LitePro. With the buttons on the remote control you can turn the LitePro on and off, control the operating mode, select the external source, adjust the projected images, and control the audio system. Some buttons auto-repeat when held down; that is, pressing and holding down one of these buttons causes it to repeatedly send its instruction to the LitePro. Other buttons toggle or sequence through a fixed number of settings, requiring you to press down the button each time you want to advance to the next setting. Some of the buttons provide more than one function, depending on whether you are operating the projector in Display mode, Menu mode, or LiteShow mode.

To use the remote control, point it either at the projection screen or at the front of the LitePro. The range for optimum operation of the remote control is approximately 30 feet.

Note:

If the projector begins to miss instructions from the remote control, you might need to replace the batteries. See Replacing Batteries in the Remote Control *in Chapter 4.*

Refer to Appendix A for detailed descriptions of each button.

Controlling the Operating Mode

The LitePro operates either in Display mode or in Menu mode. In Display mode, when an external image source is not selected, the LitePro displays either the test pattern or a blank screen. Otherwise, when connected to an external image source, and that source is selected, it displays an active graphics/video image. In Menu mode, one of several menus is overlayed on the currently projected image.

The LitePro equipped with the LS option adds another operating mode: LiteShow mode. LiteShow is an independent system within the projector. Access it by pressing the LiteShow button on the remote control. The LiteShow button toggles the projector between LiteShow mode and Display or Menu mode. In LiteShow mode, the images are taken entirely from the LiteShow system; all other image sources are ignored. Refer to the separate *LiteShow User's Guide* for information on the LiteShow mode.

- To enter Menu mode from Display mode, press the MENU button on the remote control.
- To enter Display mode from Menu mode, press the ESCAPE button on the remote control.
- To toggle the LS projector between the LiteShow mode and Display or the Menu mode, press the LITESHOW button on the remote control.

Moving through the Menus

1. Press the MENU button when in the Display mode to display the Image Menu.

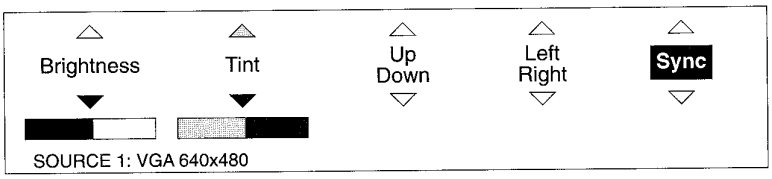

   Subsequent presses of the MENU button cycle you through the menu selections: Display, Audio, Video, Options, Program, and then back to the Image Menu.

2. Pressing the LEFT or RIGHT arrow buttons moves you around within the menu. The item that is currently selected is displayed in reverse video.
3. Pressing the UP or DOWN arrow buttons changes the setting of the selected menu item.
4. Pressing the ESCAPE button removes the menu from the screen and takes you back to Display mode.

Selecting the Defaults

The Display, Audio, Video, and Options menus all provide a Default function that returns the active menu items to their factory settings.

▼Controlling the Image

Adjusting the Height

LitePro projectors are equipped with a self-locking, quick-release elevator foot at the front of the projector. To adjust the image height:

1. Lift the front of the projector off the table by lifting up on the handle.
2. While holding the front of the projector off the table with one hand, press on the quick-release button near the handle. This releases the elevator foot.
3. With the elevator foot released, gently lift or lower the projector to the desired height. The elevator foot locks into position.
4. To more closely adjust the projector's height, rotate the elevator foot clockwise to raise the projector, or rotate it counterclockwise to lower the projector.

▼Caution:

Never press the quick release button without supporting the LitePro by the handle. Serious damage to the LitePro could result.

Focusing the Image

To focus the image, rotate the projection lens until the image is clear. Rotate the lens clockwise for a longer focusing distance; rotate it counterclockwise for a shorter focusing distance.

Switching the Projection Lamps

The LitePro contains two projection lamps: one is active, the other is available as a spare for when the active lamp fails. The average lamp life is 50 hours per lamp.

There are two types of lamp failure:

- A complete failure in which the lamp produces no light.
- A partial failure in which the lamp is dim.

To switch from the active lamp to the spare lamp, gently slide the lamp-changer knob to the opposite side of the projector. If the spare lamp fails, perform *Replacing the Projection Lamps.*

Warning:

When switching lamps, do not touch the exhaust grill on the door. This area is very hot when the unit is operating.

Caution:

Rapidly switching the lamp-changer knob from side to side can jar the lamp filaments, causing premature failure of the projection lamps.

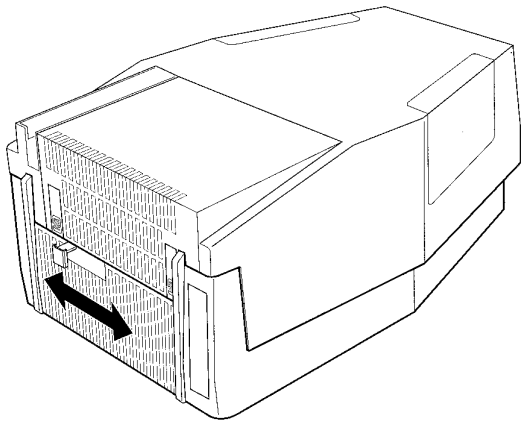

Adjusting the Brightness

Adjust the brightness from the Image Menu. To adjust the brightness you should have an image displayed; the test pattern does not change when the brightness is adjusted.

1. Press the MENU button to display the Image Menu.
2. Press the LEFT/RIGHT arrow buttons to select the Brightness function.
3. Press the UP/DOWN arrow buttons to adjust the Brightness setting. Pressing the UP arrow button lightens the image; pressing the DOWN arrow button darkens the image.
4. When you complete your changes, press the ESCAPE button to return to Display mode.

Brightness on the LitePro 540 can also be adjusted using the remote control.

Adjusting the Tint

The tint function in the Image Menu lets you adjust the red-green color balance. To adjust the tint you should have an image displayed; the test pattern is not affected by the tint setting.

1. Press the MENU button to display the Image Menu.
2. Press the LEFT/RIGHT arrow buttons to select the Tint function.
3. Press the UP/DOWN arrow buttons to adjust the tint. Pressing the UP arrow button increases the green level and decreases the red level. Pressing the DOWN arrow button does the opposite.
4. When you complete your changes, press the ESCAPE button to return to Display mode.

Centering a Partial Image

When only a part of the image is projected onto the screen, you can use the Image Menu to fine-tune the position.

1. Press the MENU button to display the Image Menu.
2. When the bottom or top of the image is cutoff, press either the LEFT or RIGHT arrow button to select the Up/Down function.

   When the left or right of the image is cutoff, press either the LEFT or RIGHT arrow button to select the Left/Right function.
3. Press the UP/DOWN arrow buttons to position the image.
4. When you have completed making your changes, press the ESCAPE button to return to Display mode.

With the LitePro 540, a partial image can be centered using the arrow buttons on the remote control.

Selecting the Sync Setting

The Sync function lets you tune the projector for optimum compatibility with your computer. Sync only affects the signals received at the SOURCE 1 and SOURCE 2 connectors. If the projected image looks fuzzy, streaked, or noisy, adjust the Sync until the image looks solid and sharp. Some noise in the image may be due to the brightness setting. If noise cannot be eliminated from the image with Sync, adjust the brightness and then the Sync again.

1. Press the MENU button to display the Image Menu.
2. Press the LEFT/RIGHT arrow buttons to select the Sync function.
3. Press the UP/DOWN arrow buttons to adjust the Sync setting.
4. When you complete your changes, press the ESCAPE button to return to Display mode.

Controlling the Colors

The following adjustments are made in the Display menu.

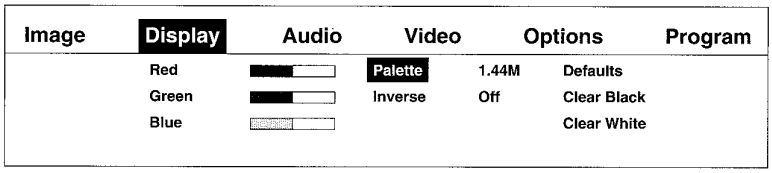

Adjusting the Colors

If the red, green or blue color levels are not acceptable after you have adjusted the Brightness and Tint settings in the Image Menu, you can adjust the colors individually. To change the color levels:

1. Press the MENU button repeatedly until the word Display is highlighted in the Menu Bar as shown above.
2. Press the LEFT/RIGHT arrow buttons to select either the Red, Green, or Blue function.
3. Press the UP/DOWN arrow buttons to change the color setting.
4. When you complete your changes, press the ESCAPE button to return to Display mode.

Selecting the Color Palette

You can choose between three color palettes for displaying your images. To change the color palette:

1. Press the MENU button repeatedly until the word Display is highlighted in the Menu Bar.
2. Press the LEFT/RIGHT arrow buttons to select the Palette function.
3. Press the UP/DOWN arrow buttons to select the desired number of colors. You can choose 1.44 million colors, 24,389 colors, or 512 colors. Most video presentations use the 1.44 million colors setting.
4. When you complete your changes, press the ESCAPE button to return to Display mode.

Inverting the Colors

You can reverse the colors in which your images are displayed with the Inverse function of the Display Menu. Inverse is used mainly with Black and White images. To inverse your displayed colors:

1. Press the MENU button repeatedly until the word Display is highlighted in the Menu Bar.
2. Press the LEFT/RIGHT arrow buttons to select the Inverse function.
3. Press the UP/DOWN arrow buttons to select ON or OFF.

   When OFF is selected, the images are displayed in their normal colors. When ON is selected, all colors in the images are switched with their complements.
4. When you complete your changes, press the ESCAPE button to return to Display mode.

Clearing the Projection Screen

You can clear away any unwanted patterns or image artifacts that might appear on the screen due to the repositioning of the image. Clearing to black is equivalent to having a blank slide in a presentation. To clear the screen to black or white:

1. Press the MENU button repeatedly until the word Display is highlighted in the Menu Bar.
2. Press the LEFT/RIGHT arrow buttons to select either the Clear Black or Clear White function.
3. Press the UP/DOWN arrow buttons to clear the screen.
4. When you complete your changes, press the ESCAPE button to return to Display mode.

▼Controlling the Audio

From the Audio menu, you can control the volume, bass, treble, balance between channels, fade between the internal and external speakers, source, loudness filtering, and muting for the audio system of the projector.

Audio is not available on the LitePro 540.

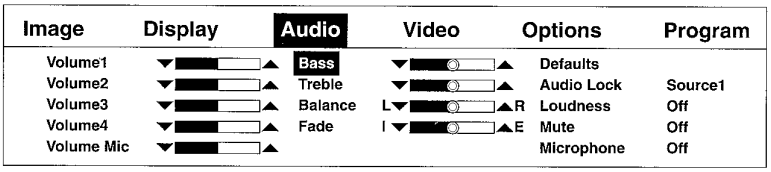

Adjusting the Volume

You can adjust the volume either directly with the Volume buttons on the remote control or indirectly from the Audio Menu. The volume can be adjusted for each source and for the microphone.

To adjust the volume from the remote control Volume buttons:

- Press the VOLUME+ button to increase the sound level. Press the VOLUME- button to decrease the sound level. Release the button when the desired setting is obtained. This only affects the volume of the active source.

To adjust the volume from the Audio Menu:

1. Press the MENU button repeatedly until the word Audio is highlighted in the Menu Bar.
2. Press the LEFT/RIGHT arrow buttons to select the Volume you want to adjust. (Volume1 corresponds to Source1 in the Video Menu).
3. Press the UP/DOWN arrow buttons to adjust the volume setting as needed. Pressing the UP arrow button increases the sound level; pressing the DOWN arrow button decreases the sound level.

Note:

You can only hear the volume change on the currently selected input.

4. When you complete your changes, press the ESCAPE button to return to Display mode.

Adjusting the Bass and Treble

To achieve a pleasing balance between the bass and treble components of your audio, adjust them consecutively.

To adjust the bass and treble:

1. Press the MENU button repeatedly until the word Audio is highlighted in the Menu Bar.
2. Press the LEFT/RIGHT arrow buttons to select the Bass or Treble.
3. Press the UP/DOWN arrow buttons to adjust the setting as desired. Pressing the UP arrow button increases the bass or treble level; pressing the DOWN arrow button decreases the bass or treble level.
4. When you complete your changes, press the ESCAPE button to return to Display mode.

Adjusting the Balance Between Channels

The Balance adjustment controls the audio levels between the right and left channels of all four sources and the microphone.

To adjust the balance in the audio between the right and left channels:

1. Press the MENU button repeatedly until the word Audio is highlighted in the Menu Bar.
2. Press the LEFT/RIGHT arrow buttons to select the Balance function.
3. Press the UP/DOWN arrow buttons to adjust the balance as desired. Pressing the UP arrow button increases the output to the right channel; pressing the DOWN arrow button increases the output to the left channel.
4. When you complete your changes, press the ESCAPE button to return to Display mode.

Adjusting the Fade

The Fade selection controls the audio levels between the projector's internal speakers and the external audio connectors.

To adjust the fade:

1. Press the MENU button repeatedly until the word Audio is highlighted in the Menu Bar.
2. Press the LEFT/RIGHT arrow buttons to select the Fade function.

3. Press the UP/DOWN arrow buttons to adjust the sound level between the internal speakers and the external audio connectors as desired. Pressing the UP arrow button increases the signal to the internal speakers; pressing the DOWN arrow button increases the signal to the external audio connectors.
4. When you complete your changes, press the ESCAPE button to return to Display mode.

Locking Audio Off or to a Source

Although you generally want your audio source to be supplied by your graphics/video source during a presentation, you can lock the LitePro's audio to a particular source, such as a video or background music. Use the mute button on the remote control to turn off the audio source.

To lock the audio:

1. Press the MENU button repeatedly until the word Audio is highlighted in the Menu Bar.
2. Press the LEFT/RIGHT arrow buttons to select the Audio Lock function.
3. Press the UP/DOWN arrow button to select the desired setting. You can choose to lock the audio to any of the four SOURCE input connectors, or OFF. Selecting Off means the audio will follow the sources.
4. When you complete your changes, press the ESCAPE button to return to Display mode.

Muting the Audio

The Mute function can be turned on or off either directly using the MUTE button on the remote control, indirectly with the menu, or by assigning this function to the PROG button on the remote control.

To control the Mute function from the remote control:

- Press the MUTE button to toggle between enable (ON) or disable (OFF). Mute turns off the external audio and the internal audio.

To enable muting using the Audio Menu:

1. Press the MENU button repeatedly until the word Audio is highlighted in the Menu Bar.
2. Press the LEFT/RIGHT arrow buttons to select the Mute function.
3. Press the UP/DOWN arrow buttons to toggle between enabled (ON) and disabled (OFF).
4. When you complete your changes, press the ESCAPE button to return to Display mode.

Filtering the Audio

To enable the loudness filter using the Audio Menu:

1. Press the MENU button repeatedly until the word Audio is highlighted in the Menu Bar.
2. Press the LEFT/RIGHT arrow buttons to select the Loudness Filter function.
3. Press the UP/DOWN arrow buttons to toggle between enabled (ON) and disabled (OFF).
4. When you complete your changes, press the ESCAPE button to return to Display mode.

Selecting the Microphone

The Microphone can be turned on or off through the MIC button on the remote control, within the Audio Menu, or by assigning this function to the PROG button on the remote control.

To enable the Microphone using the Audio Menu:

1. Press the MENU button repeatedly until the word Audio is highlighted in the Menu Bar.
2. Press the LEFT/RIGHT arrow buttons to select the Microphone function.
3. Press the UP/DOWN arrow buttons to toggle between enabled (ON) and disabled (OFF).
4. When you complete your changes, press the ESCAPE button to return to Display mode.

▼Controlling the Video and Graphics

The Video Menu and remote control of the LitePro projector provides sophisticated control of your graphics/video images.

SOURCEs 3 and 4 are not available on the LitePro 540.

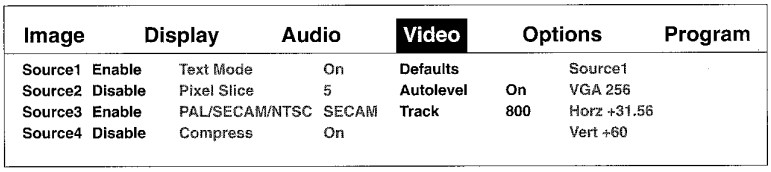

Selecting the SOURCE

You can have a graphics/video signal connected to any or all of the four SOURCE input connectors of the projector. However, you can only project the image from one SOURCE at a time.

To select which SOURCE is active using the remote control:

- Press the SELECT button repeatedly until the desired SOURCE is displayed. Each time you press the SELECT button, the next SOURCE input signal is selected.

Individual sources can be enabled or disabled in the Video Menu. A source that is disabled will be skipped when the Select button is pressed. For example, if a computer is connected to Source 1 and a VCR is connected to Source 3, disabling Source 2 and 4 will then cause the Select button to toggle between Sources 1 and 3.

To select which SOURCE connector is active using the Video Menu:

1. Press the MENU button repeatedly until the word Video is highlighted in the Menu Bar.
2. Press the LEFT/RIGHT arrow buttons to select the desired Source.
3. Press the UP/DOWN arrow buttons to toggle between enabled and disabled.
4. When you complete your changes, press the ESCAPE button to return to Display mode.

Note:

When the Audio Lock function of the menu is Off, the audio input signal tracks with the graphics/video signal through the four SOURCE inputs.

Freezing the Image (Pausing)

At any time during a presentation you can freeze the active graphics/ video image on the screen by pressing the FREEZE button on the remote control. To resume your presentation, press any button on the remote control. The presentation resumes with the next image.

Adjusting the Text Mode and Pixel Slice

Some computer graphics modes generate a 720-pixel wide image, which extends beyond the LitePro's 640-pixel wide image area (VGA text, for example).

To set the projector either to compress or to truncate these elements:

1. Press the MENU button repeatedly until the word Video is highlighted in the Menu Bar.
2. Press the LEFT/RIGHT arrow buttons to select the Text Mode function.
3. Press the UP/DOWN arrow buttons to select ON or OFF.

   When ON is selected, images that are 720 pixels in width are compressed into a 640-pixel wide display under the control of the Pixel Slice setting. When OFF is selected, any part of the image that is outside the 640-pixel boundary is lost.
4. When ON is selected, set the Pixel Slice for the setting that results in the best displayed text. To set the Pixel Slice press the LEFT/RIGHT arrow buttons to select the Pixel Slice function. Then press the UP/DOWN arrow buttons to select the desired setting.

   Some video sources are recognized as text mode and are automatically compressed. For those sources, pixel slice is active and can be set to slice out the desired pixel.
5. When you complete your changes, press the ESCAPE button to return to Display mode.

Selecting PAL, SECAM, or NTSC Video

The PAL/SECAM/NTSC function of the LitePro 550 Video Menu allows you to specify whether your active video SOURCE signal conforms to the PAL, SECAM, or NTSC standard. If this setting is incorrect, the colors of your video images look wrong. This function is not available on the LitePro 540.

To select PAL, SECAM, or NTSC video:

1. Press the MENU button repeatedly until the word Video is highlighted in the Menu Bar.
2. Press the LEFT/RIGHT arrow buttons to select the PAL/SECAM/NTSC function.
3. Press the UP/DOWN arrow buttons to select PAL, SECAM, or NTSC.
4. When you complete your changes, press the ESCAPE button to return to Display mode.

Controlling Video Compression

When your video source is a PAL or SECAM signal, you can compress the image to fit in the display area. This function is not available on the LitePro 540.

To compress the image:

1. Press the MENU button repeatedly until the word Video is highlighted in the Menu Bar.
2. Press the LEFT/RIGHT arrow buttons to select the Compress function.
3. Press the UP/DOWN arrow buttons to select ON or OFF.

   When ON, PAL and SECAM video images are compressed to fit into the LitePro's display area. When OFF, any part of the image that is outside the display area is not displayed.
4. When you complete your changes, press the ESCAPE button to return to Display mode.

Setting the Auto Level

The Auto Level function enables and disables the automatic brightness level adjustment of the incoming graphics/video signals. Most presentations use the ON setting of the Auto Level function, which allows the projector to select the best color level setting for the image.

1. Press the MENU button repeatedly until the word Video is highlighted in the Menu Bar.
2. Press the LEFT/RIGHT arrow buttons to select the Auto Level function.
3. Press the UP/DOWN arrow buttons to enable (ON) or disable (OFF) the automatic level adjustment function. When ON, the projector selects the best color level setting for the incoming image. When OFF, you must manually adjust the colors.
4. When you complete your changes, press the ESCAPE button to return to Display mode.

Adjusting the Tracking

With the tracking adjustment, you can match the projector's internal clock to different graphic/video signals. Using tracking lets the LitePro project clear images from a range of graphic/video systems. Adjust the tracking whenever your images show evenly spaced, fuzzy vertical lines or when the image is too wide or too narrow for the screen.

1. Press the MENU button repeatedly until the word Video is highlighted in the Menu Bar.
2. Press the LEFT/RIGHT arrow buttons to select the Track function.
3. Press the UP/DOWN arrow buttons to adjust the tracking. Pressing the UP arrow button makes the image look wider, as indicated by the raising of the tracking value. Pressing the DOWN arrow button makes the image look narrower, as indicated by the lowering of the tracking value.

Adjust the tracking until the fuzzy lines move apart on the screen or disappear, or until the text fits the screen. Ideally the image has no bars visible and all the projected text or graphics/video are contained within the display.

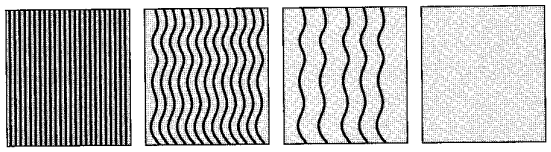

4. When you complete your changes, press the ESCAPE button to return to Display mode.

Graphics Information

The far right column of the Video Menu displays the type of graphics source connected to the projector. For example, VGA indicates a connection to a VGA-type computer and MAC indicates a connection to a Macintosh style computer. It also displays the horizontal sync rate and the vertical sync rate.

An internal mode number (for use by In Focus service personnel) is displayed next to the source type, followed by an analog/digital indicator (either A or D), followed by a phase-loop locking/unlocking indicator (either L or U).

▼Setting the Options

Image	Display	Audio	Video	Options	Program
Language	English	Test Pattern	On	Defaults	
Rear Projection	Off	RS-232	On		
Source Prompt	Off	Auto Standby	Off		

Selecting the Menu Language

You can display the menus in these languages: English, French, German, Italian or Spanish. By default, the projector is set for English. To change the language:

1. Press the MENU button repeatedly until the word Options is highlighted in the Menu Bar.
2. Press the LEFT/RIGHT arrow buttons to select the Language function.
3. Press the UP/DOWN arrow buttons to select the desired language.
4. When you complete your changes, press the ESCAPE button to return to Display mode.

Selecting Rear Projection

LitePro projectors can easily be used with either a front projection screen or a rear projection screen. When rear projection is enabled, the projected images are flipped from left to right for correct viewing. By default, the projector is set for front projection.

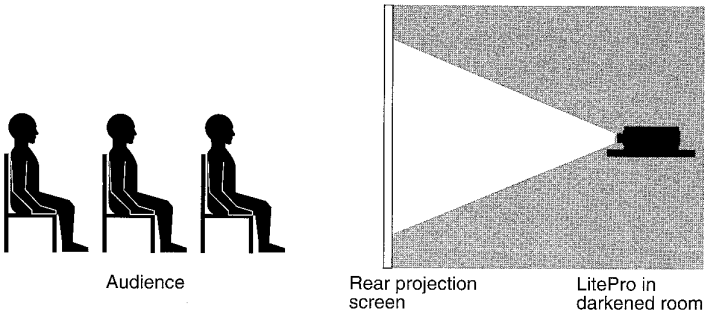

To enable rear projection:

1. Press the MENU button repeatedly until the word Options is highlighted in the Menu Bar.
2. Press the LEFT/RIGHT arrow buttons to select the Rear Project function.
3. Press the UP/DOWN arrow buttons to toggle to the ON setting.
4. When you complete your changes, press the ESCAPE button to return to Display mode.

Note:

To return to front projection, set the Rear Project function to OFF.

Displaying the Source Prompt

The LitePro momentarily displays which source is active when you press the Select button. To disable this function:

1. Press the MENU button repeatedly until the word Options is highlighted in the Menu Bar.
2. Press the LEFT/RIGHT arrow buttons to select the Source Prompt function.
3. Press the UP/DOWN arrow buttons to toggle to the OFF setting.
4. When you complete your changes, press the ESCAPE button to return to Display mode.

Disabling the Test Pattern

When the test pattern function is OFF, a blank screen is shown instead of the test pattern. To disable the test pattern function:

1. Press the MENU button repeatedly until the word Options is highlighted in the Menu Bar.
2. Press the LEFT/RIGHT arrow buttons to select the Test Pattern function.
3. Press the UP/DOWN arrow buttons to toggle to the OFF setting.
4. When you complete your changes, press the ESCAPE button to return to Display mode.

Enabling & Disabling the RS-232 Port

When the RS-232 port is enabled, the four arrow buttons send commands over the RS-232 serial port (in display mode only). Optional software drivers are planned that will fully utilize this feature. Please contact your local In Focus Systems dealer for more information. To enable the RS-232 port:

1. Press the MENU button repeatedly until the word Options is highlighted in the Menu Bar.
2. Press the LEFT/RIGHT arrow buttons to select the RS-232 function.
3. Press the UP/DOWN arrow buttons to toggle to the ON setting.
4. When you complete your changes, press the ESCAPE button to return to Display mode.

Setting Auto Standby

The Auto Standby function controls the time between the last command and when the lamp turns off. The Auto Standby timer begins counting when no input signal is detected on the selected source. It will not engage as long as an input signal is present at the selected source. Auto Standby is indicated by the lamp shutting off and the flashing of the green PWR LED located on the side panel. Auto Standby can be set to Off, 5 minutes, 10 minutes, or 30 minutes. The Standby mode can also be engaged by pressing the On/Off button on the remote control.

To enable Auto Standby:

1. Press the MENU button repeatedly until the word Options is highlighted in the Menu Bar.
2. Press the LEFT/RIGHT arrow buttons to select the Auto Standby function.
3. Press the UP/DOWN arrow buttons to select the desired minutes.
4. When you complete your changes, press the ESCAPE button to return to Display mode.

▼Selecting the PROG Function

Microphone, Mute, and Loudness are not available on the LitePro 540.

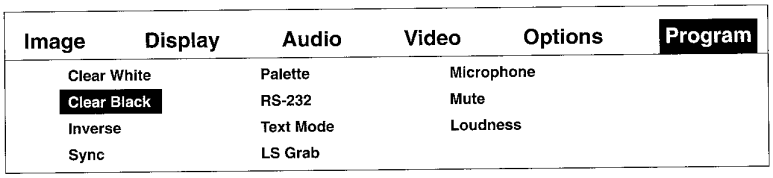

The Program Menu allows you to assign a function to the PROG button on the remote control. The following functions can be assigned: Clear White, Clear Black, Inverse, Sync, Palette, RS-232, Text Mode, LS Grab, Microphone, Mute, and Loudness.

1. Press the MENU button repeatedly until the word Program is highlighted in the Menu Bar.
2. Press the LEFT/RIGHT arrow buttons to highlight the function to be assigned to the PROG button. The PROG button is now assigned and can be used immediately.
3. Press the ESCAPE button to return to Display mode.

▼ Maintenance Instructions

The information in this chapter describes how to maintain your LitePro in optimum condition for maximum day-to-day performance. In addition to the step-by-step procedures given in this chapter, follow the instructions in the *Safety Summary* at the front of this manual to keep the projector in optimum working condition.

Warning:

Except for the projection lamps behind the lamp-access door, the interior of the projector contains no user-serviceable parts. To avoid electric shock, refer all projector servicing to an In Focus Systems authorized service center. Failure to do so can result in serious personnel injury or damage to the LitePro.

Note:

Operating the LitePro at temperatures above 90° F (32° C) can cause it to automatically turn off the projection lamp and begin a short cooling down period. (See Appendix B for the projector's operating specifications.)

Cleaning the Projection Lens

To clean the projection lens:

1. Remove the lens cover and set it aside.
2. Apply a nonabrasive glass cleaner to a soft, dry cleaning cloth.

   Be careful not to use excessive amounts of liquid glass cleaner. Also, do not use abrasive cleaners, solvents, or other harsh chemicals that might scratch the lens.
3. Lightly wipe the cleaning cloth over the lens.
4. Replace the lens cover.

Replacing the Projection Lamps

When a lamp fails, replace it with a specified replacement lamp. In Focus Systems recommends EVD bulbs manufactured by GE and OSRAM for the best performance and longest bulb life. (Refer to the specifications in Appendix B for additional information.)

In addition to the two replacement lamps, you need a clean soft cloth when replacing the lamps.

Caution:

Never touch a projection lamp with your bare fingers. When replacing a lamp, always hold a clean cloth between your fingers and the lamp. Natural skin oils can concentrate heat on the lamp and quickly destroy the new replacement lamp.

1. Turn off the lamp using the power switch on the remote control and allow it to cool for twenty minutes.

Warning:

The rear of the LitePro and inside the lamp switching chamber can become extremely hot during and after use. Use extreme care and let the projector cool for at least twenty minutes before replacing a lamp.

2. Turn off the power switch on the projector and disconnect the power cord.
3. Push in on the latches as shown to open the lamp access door at the rear of the projector.

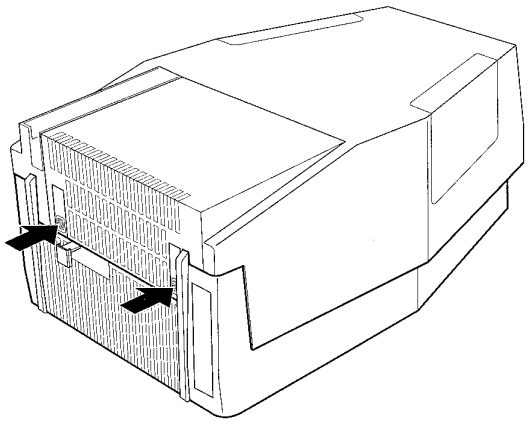

4. Hold open the lamp access door with one hand. Then, using a cloth, use your other hand to unplug the spare lamp from the lamp holder as shown. Use extreme care to avoid burns from any hot metal parts in the lamp chamber. Set aside the removed lamp.

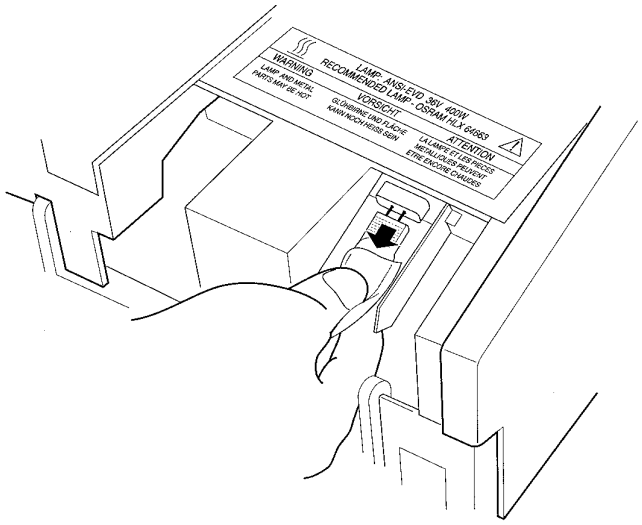

5. Keeping the replacement lamp in its original plastic bag, gently pick it up and plug it into the lamp holder. Be careful that you don't tilt the lamp when installing it. When correctly installed, the prongs of the lamp seat straight in the lamp holder and fully to the hilt of the lamp.
6. Slide the lamp holder to the other side in order to gain access to the other lamp.
7. If necessary, repeat steps 4 and 5 to replace the second lamp.
8. Close the lamp access door.

Caution:

Never operate the projector with the lamp access door open or removed. This disrupts the airflow inside the unit and can cause overheating.

The LitePro is equipped with Bulb Guard, an In Focus exclusive bulb life detection system. When the bulb is near the end of its life, or has degraded in performance, the projected image blinks to indicate so. When this happens, simply switch to the spare lamp. After you have finished using the projector, and it has cooled sufficiently, replace the old bulb with a new one.

Replacing Batteries in the Remote Control

Periodically, you need to replace the batteries in the remote control with new batteries. How often you must replace the batteries depends on how often and how long the LitePro is operated. Symptoms of low battery charge include erratic responses to button presses and reduced range of the remote control.

To replace the batteries in the remote control:

1. Slide the battery cover on the bottom of the remote control away from the unit as shown on the left.
2. Remove and discard the batteries.
3. Install two AAA alkaline batteries as shown on the right.
4. Replace the battery cover.

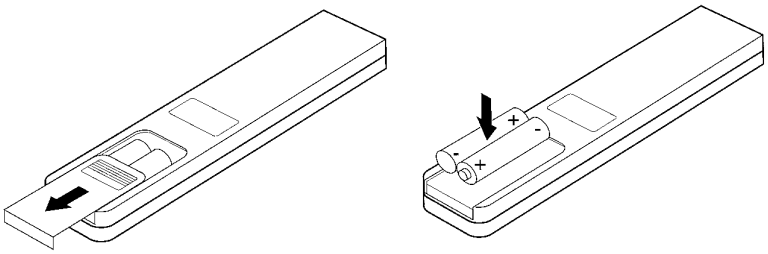

Replacing the Fuse

Occasionally, a power-line surge or spike can blow open the projector's power-supply fuse. When this occurs, first make sure that the condition that caused the fuse to blow open no longer exists, then use the directions given here to replace the fuse. The fuse used in your LitePro projector depends on the line voltage you are using. Refer to the specification in Appendix B for replacement fuse information.

Warning:

For continued protection against risk of fire, use only the power-supply fuse specified for your projector. Replace an opened fuse only with a directly replaceable part. When operating from a nominal 120V power source use a type 3AB rated 250V, 10A fuse. When operating from a nominal 230V power source use a 5x20mm time delay 6300mA (6.3A), 250V rated fuse.

To replace the power supply fuse:

1. Turn off the projector with the on/off switch.
2. Disconnect the power cord from the power source.
3. Using a small coin or flat-blade screwdriver, turn the fuse holder (on the side of the projector) a quarter turn in the counterclockwise direction.
4. Remove the fuse holder from the projector.
5. Remove the fuse from the holder and replace it with a known good fuse of the specified type and rating.
6. Push the new fuse into the clips of the fuse holder until the fuse is securely seated as shown.
7. Insert the fuse holder back into the projector.
8. Using a small coin or flat-blade screwdriver, turn the fuse holder a quarter turn in the clockwise direction.
9. Connect the power cord to the power source.
10. Turn on the projector.

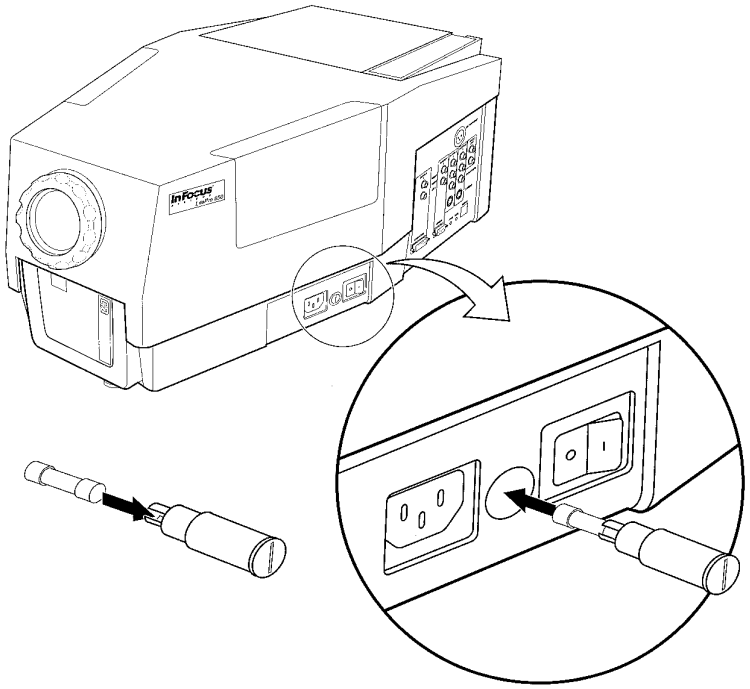

▼ Troubleshooting Guide

If you are having a problem operating the projector, first make sure you have set it up according to the instructions in Chapter 2. You should also check the adjustments and connections on both the projector and its attached peripheral equipment, such as the computer, video source(s), audio source(s), and so forth. Verify that all power is switched on. Once you have determined that the projector, computer, peripheral equipment, and overall set-up are not causing the problem, check the troubleshooting suggestions in this chapter.

▼ Problem: **Projector shuts off by itself during operation**

Possible causes and solutions:

You might not have power. Check to see that the power cord is plugged into the projector and into the AC outlet. Check that the projector's power switch is in the On (1) position. Check that the green PWR indicator on the side panel is lit. Check that the projector's fuse is not blown.

Check to see if something is blocking the fan intake or if there is insufficient clearance (or obstructions) at the fan exhaust. The projector shuts itself off automatically and begins a cool-off period if it becomes overheated (see the maximum operating temperature range specification in Appendix B). The projector resets itself after cooling down.

The projector may have enabled Auto Standby. Check to see if the green PWR LED is flashing.

▼ Problem: **Only the test pattern is displayed**

Possible causes and solutions:

Your projector's cables might not be connected correctly. Check to see that the cables are connected to the image source(s) as described in Chapter 2.

Your computer graphics system might not be set up correctly. Check the following: your computer's color graphics card is turned on; your computer has a compatible graphics card; and the computer's external video card has been turned on.

You might have the wrong SOURCE selected. Check the menu to determine which SOURCE is selected; change the SOURCE if desired.

Check the Video Menu to verify that the SOURCE is enabled.

▼ Problem: **Nothing on screen**

Possible causes and solutions:

You might not have power. Check to see that the power cord is plugged into the projector and into the AC outlet. Check that the projector's fuse is not blown. Check that the projector's power switch is in the On (1) position and that the green PWR indicator is lit.

The power cord might not be plugged into a live AC outlet. Check to ensure that the outlet is functional.

The power cord might be plugged into a power strip that is not turned on. Check to ensure that the power strip is turned on.

One or both projection lamps might be defective. Switch the projection lamps or replace both projection lamps (see the procedures in Chapter 4).

Your projector might not be adjusted properly. Also, check and adjust the brightness control setting.

The projector might not be receiving an active signal at the selected SOURCE connector. Check that the selected SOURCE is receiving an active signal.

Check the Video Menu to verify that the SOURCE is enabled.

▼ Problem: **Nothing on computer monitor**

Possible causes and solutions:

You might not have power to either the projector or the computer monitor. Check to see that the projector and monitor power cords are plugged into the units and into the AC outlet. Check that the projector's fuse is not blown. Check that the projector and monitor power switches are in the On (1) position.

The power cords might not be plugged into live AC outlets. Check to ensure that the outlets are functional.

The power cords might be plugged into a power strip that is not turned on. Check to ensure that the power strip is turned on.

Check that the Y-cable is properly connected between the projector, the computer, and the computer monitor as described in Chapter 2.

Note: Only the data from Source1 appears on the monitor.

▼ Problem: **Projected image blinks off and on.**

Possible causes and solutions:

The In Focus bulb life detection system has been activated. Switch the lamp changer to the spare lamp. After you have finished using the projector, and it has cooled sufficiently, replace the old lamp with a new one.

▼ Problem: **Image not centered on screen**

Possible causes and solutions:

Adjust the projector's height or adjust the position control to center the image on the screen.

▼ Problem: **Color or VGA text not projected**

Possible causes and solutions:

You might have turned on the computer before you turned on the projector, the computer monitor, and all other attached peripheral equipment. Shut down the computer, then turn on the computer monitor, the projector, and any attached equipment following the sequence given in Powering On the Equipment *in Chapter 2.*

Your brightness control might need to be adjusted. Adjust the brightness control up or down until the text is visible.

Your video source might be displaying colors that are too similar. Adjust the colors being used/generated by your video source to increase the difference between displayed colors.

▼ Problem: **Image is jittery or fuzzy**

Possible causes and solutions:

You might need to adjust the sync to stabilize the projected image. If noise cannot be eliminated from the image with sync, try adjusting the image brightness and then adjust the sync again.

The projection lens may not be adjusted correctly. Rotate the lens until the image is in focus.

The projection lens might be dirty. Clean the lens as described in Chapter 4.

▼ Problem: **Image is too wide or narrow for the screen**

Possible causes and solutions:

You might need to adjust the tracking to reduce or enlarge the projected image.

Check to see that your computer has a compatible graphics output as defined in Appendix C.

You might be using a high-resolution graphics card. Make sure your computer is compatible.

▼ Problem: **Image is out of focus**

Possible causes and solutions:

The projection lens is not adjusted correctly; rotate the lens until the image is in focus.

The projection lens might be dirty. Clean the lens as described in Chapter 4.

▼ Problem: **Dark spots on projected image**

Possible causes and solutions:

The projection lens might be dirty. Clean the lens as described in Chapter 4.

▼ Problem: **The projected colors do not match the source graphics or video**

Possible causes and solutions:

Adjust the brightness and tint. However, just as there are differences in the displays of different computer monitors, there will always be some differences between the graphics or video source and the projected image.

The video signal might be too weak if the colors are faint and weak, or the video signal might be too strong if the image is washed out and excessively white. Check that the video signal is within the specifications listed in Appendix B.

If You Need Assistance

Your LitePro is backed by a limited one-year warranty. The first place to look for help is in this manual. Be sure to check the troubleshooting guidelines in this chapter.

If this manual does not answer your question, call either your authorized In Focus Systems dealer or call In Focus Customer Service for assistance. They can help you determine whether or not you need to have the unit serviced. You can reach the In Focus Customer Service department at **1-800-327-7231** or **503-692-4968**, between 6 a.m. and 5 p.m. PST, Monday through Friday. In Europe, you can call Customer Service Support in The Netherlands at **31 (0) 2503-23200.**

Buttons & Menus

LitePro projectors are controlled from a hand-held, 12-button, battery-operated, remote control. Some buttons auto-repeat when held down; pressing and holding down one of these buttons causes it to repeatedly send its instruction to the projector. Other buttons toggle or sequence through a fixed number of settings, requiring you to press down the button each time you want to advance to the next setting. Some of the buttons provide dual functions, depending upon whether you are operating the projector in Display mode, Menu mode, or LiteShow mode.

This appendix describes:

- The functions of the buttons on the remote control
- The functions available with the menus of the LitePro projectors

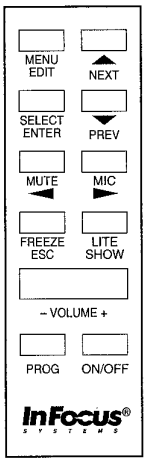

LitePro 550 Remote

Button Functions

The illustrations show the placement of the keys on the remote control keypad. Some of the buttons on the remote control provide different functions between the Display mode and the Menu mode. The operation of each button is described next.

Menu Button

In Display Mode:	Selects the Menu mode. The Image Menu is displayed on the projection screen and the up/down Arrow and left/right arrow buttons assume their Menu mode functions.
In Menu Mode:	Advances through the menu list.

Select Button

In Both Modes:	Advances to select the next enabled external graphics/video/audio source. See Video Menu for how to enable/disable the sources. Unless the Audio Lock menu selection is turned on, locking the audio to a particular source, the audio source advances along with the graphics/video source.

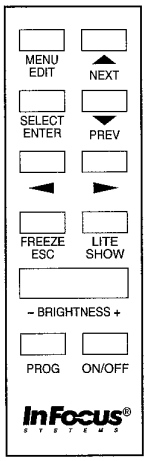

LitePro 540 Remote

Up Arrow/Next Button*

In Display Mode: Moves the image higher on the projection screen.

In Menu Mode: Moves through the available settings for the active menu selection.

Down Arrow/Prev Button*

In Display Mode: Moves the image lower on the projection screen.

In Menu Mode: Moves through the available settings for the active menu selection.

Left Arrow/Mute Button

In Display Mode: LitePro 550: Enables and disables the mute function that blocks the audio.

LitePro 540*: Moves the image to the left on the projection screen.

In Menu Mode*: Activates the previous selection in the current menu.

Right Arrow/MIC Button

In Display Mode: LitePro 550: Enables and disables the microphone input.

LitePro 540*: Moves the image to the right on the projection screen.

In Menu Mode*: Activates the next selection in the current menu.

Freeze/Esc Button

In Display Mode: Freezes the current image on the projection screen. Pressing this or any other button unfreezes the image and advances to the next image.

In Menu Mode: Returns to the Display mode.

* This is an auto-repeating button.

LiteShow Button

In Both Modes: Sets the projector to the currently active LiteShow mode (either to LiteShow Present or LiteShow Edit mode.) Once in a LiteShow mode, pressing the LiteShow button again returns to the projector's previously current primary mode (that is, to either Display mode or Menu mode).

Volume Button (Model 550 only)

In Both Modes: The + side of the button increases the volume of the selected source; the - side of the button decreases the volume of the selected source.

Brightness Button (Model 540 only)

In Both Modes: The + side of the button lightens the projected image while the - side of the button darkens the projected image.

Prog Button

In Both Modes: Performs the function to which it is currently assigned. The following functions can be assigned to the PROG button: Clear White, Clear Black, Inverse, Sync, Palette, RS-232, Text Mode, LS Grab, Microphone, Mute, and Loudness.

On/Off Button

In Both Modes: If the LitePro is on, pressing the On/Off button places it in standby mode, turning off the projection lamp and, after the projector's internal temperature cools sufficiently, also turning down the fan. The green PWR LED flashes to indicate standby mode. Pressing the On/Off button a second time restores power to the projection lamp and fan.

Menus

The Image Menu of the LitePro allows fast access to the most frequently used functions. The Main Menus allow precise control of your LitePro.

Moving Through the Menus

- Pressing the MENU button on the remote control when in the Display mode displays the Image Menu. The Image Menu allows you to adjust the Brightness, Tint, Up/Down Position, Left/Right Position, and the Sync.
- Repeatedly pressing the menu button cycles you through the Main Menu headings and back to the Image Menu.

Adjusting a Menu Option

- Pressing the LEFT or RIGHT arrow buttons moves you around within the menu. The item that is currently selected is displayed in reverse video.
- Pressing the UP or DOWN arrow buttons changes the setting of the selected menu item.
- Pressing the ESCAPE button removes the menu from the screen and takes you back to Display mode.

Menu Functions

Refer to the procedures in Chapter 3 for specific instructions on using the menus.

This table describes the Image Menu options and their settings.

FUNCTION	VALUES	DESCRIPTION
Bright	Adjustable	Controls the brightness. Select this function, then use the up arrow button to brighten the projected image and raise the level on the Bright bar. Use the down arrow button to darken the image, as indicated by the lowering of the level on the Bright bar.
Tint	Adjustable	Controls the red-green color balance. Select this function, then use the up arrow button to increase the green level and decrease the red level, or use the down arrow button to do the opposite. Tint changes are visible only if the test pattern is not displayed.
Up/Down	Adjustable	Controls the position of the projected image on the screen. Select this function, then use the up arrow button to position the image up, and the down arrow button to position the image down on the screen.
Left/Right	Adjustable	Controls the position of the projected image on the screen. Select this function, then use the up arrow to position the image to the left, and the down arrow button to position the image to the right on the screen.
Sync	Adjustable	Controls the projector to match the graphics signals produced by various computer graphics systems. Select this function, then us the up/down arrow buttons to cycle through the available sync settings.

This table describes the Display Menu options and their settings.

FUNCTION	VALUES	DESCRIPTION
Red/Green/ Blue	Adjustable	Controls the individual color levels. Select this function, then use the up arrow to increase the individual color level. Use the down arrow to decrease the individual color level.
Palette	512; 24,389; 1.44 million	Selects the number of colors used in the images.
Inverse	On, Off	Selects either normal or reverse video images. Select OFF for normal images or select ON for inverted images. All colors are switched with their complements in inverted mode.
Default	Toggle	Sets all active Display functions to their factory default values.
Clear Black/ Clear White	Toggle	Clears the projection screen to the color selected.

This table describes the Audio Menu options and their settings. (LitePro 550 only)

FUNCTION	VALUES	DESCRIPTION
Volume 1,2,3,4,Mic	Adjustable	Controls the volume of the audio from the indicated source.
Bass	Adjustable	Controls the proportion of the bass of the audio from the LitePro projector.
Treble	Adjustable	Controls the proportion of the treble of the audio from the LitePro projector.
Balance	Adjustable	Controls the balance between the audio channels from the LitePro projector.
Fade	Adjustable	Controls the balance between the internal speakers and the external audio.
Default	Toggle	Sets all active Audio functions to their factory default values.
Audio Lock	Off, 1, 2, 3,4	Locks the audio source to a particular audio input source, regardless of the selected video source.
Loudness	On, Off	Enables or disables the loudness filter.
Mute	On, Off	Enables or disables the projector's audio output.
Microphone	On,Off	Enables or disables the Microphone.

This table describes the Video Menu options and their settings.

FUNCTION	VALUES	DESCRIPTION
Source1,2,3,4	On,Off	Enables or disables the selected input source. Sources 3 and 4 are not available on the LitePro 540.
Text Mode	On, Off	Enables or disables text mode (that is, 720-pixel wide mode). ON compresses images that are 720 pixels wide into a 640-pixel wide screen.
Pixel Slice	0—8	Specifies which pixel to skip when displaying 720-pixel wide images on a 640-pixel wide screen with Text Mode set to ON.
PAL/SECAM/ NTSC	PAL, SECAM, NTSC	Specifies that the video input signal is either a PAL, SECAM, or NTSC signal. (550 only)
Compress	On, Off	Enables or disables PAL and SECAM video compression. ON enables video compression for use when the video images are slightly larger than the projection screen. (550 only)
Default	Toggle	Sets all active Video functions to their factory default values.
Auto Level	On, Off	Enables or disables automatic level adjustments. ON sets the LitePro to automatically adjust the level of the incoming data/video signal. With Auto Level set to OFF, you must manually adjust the color.
Track	Adjustable	Controls the timing of the LitePro's internal clock to different data/video input signals. Use the up arrow button to make the image look wider, as indicated by the raising of the tracking value. Use the down arrow button to make the image look narrower, as indicated by the lowering of the tracking value.

This table describes the parameters that are displayed in the Video Menu.

PARAMETER	DESCRIPTION
Input	Displays the active SOURCE for the LitePro.
Mode	Displays the type of graphics or video connected to the currently selected SOURCE connector. For example, "VGA" indicates a connection to a VGA-type computer, "MAC" indicates a connection to a Macintosh style computer, and "NTSC" indicates a connection to an NTSC-compatible video source. Next to the source type, an internal mode number (for use by In Focus service personnel) is displayed, followed by an analog/digital indicator (either A or D), followed by a phase-loop locking/unlocking indicator (either L or U).
Horiz	Displays the horizontal sync signal polarity or composite indicator (either +, -, or c) followed by the horizontal sync rate in kilohertz.
Vert	Displays the vertical sync signal polarity or composite indicator (either +, -, or c) followed by the vertical sync rate in hertz.

This table describes the Options Menu functions and their settings.

FUNCTION	VALUES	DESCRIPTION
Language	English, French, German, Italian, Spanish	Selects the language used in the menus.
Rear Project	On, Off	Selects either front- or rear-projection. ON specifies rear projection, whereby the images are flipped from left to right. OFF specifies front projection.
Source Prompt	On,Off	Enables or disables whether the source prompt is displayed when the Select button is pressed.
Test Pattern	On,Off	Enables or disables the test pattern.
RS-232	On,Off	Allows the arrow buttons to output to computers when On. Optional software drivers required.
Auto Standby	Off,5,10, 30 minutes	Sets the time between last command and the lamps turning off.
Default	Toggle	Sets all active Options Menu functions to their factory default values.

Specifications & Accessories

This appendix first lists the LitePro product specifications and then lists the accessories and replaceable parts available for the LitePro.

LitePro Specifications

The LitePro must be operated within the limits of these specifications.

Projection lamps	
Type	400 W tungsten halogen, EVD bulbs manufactured by GE and OSRAM.
Life	50 hours average (each)
Input power requirements	
100 – 240 Vac, 7.2A-2500mA, 50-60 Hz	
Fuse Requirements	
100-120V nominal line	10A, 250V, 3AB
220-240V nominal line	6300 mA, 250V, 5x20mm
Temperature	
Non-operating	0° to 60° C
Operating	Nominal 25° C
Remote control	
Battery Type	AAA alkaline cells (two required)
Range	25 feet when reflected off a white wall or projection screen within 45 degrees of projection axis
Optical	
Brightness	Minimum 155 lumens (ANSI 9 point method)
Uniformity	1.9:1 (12 point method)

Audio system	
Input connectors	1 V p-p maximum into 10K ohms input impedance
Output connectors	1 V p-p maximum into 600 ohms
Internal amplifier	5 W per stereo channel, less than 3% total harmonic distortion
Internal speakers	3-inch diameter, 8 ohm
Microphone Input	Balanced (XLR) input for loud impedance (<500 ohms) dynamic microphones (no phantom power)
Humidity	
Operating and non-operating	10 to 90% RH, non-condensing
Altitude	
Non-operating	20,000 ft.
Vibration	
Non-operating	Random vibrations simulating 3000 miles of cargo transportation
Operating	10 to 100 Hz with 1.5 G constant acceleration
Shock	
Non-operating	40 G's in all six axis, $^1/_2$ sine wave (without projection lamp installed), 11 ms
Weight	
Unpackaged	20 lbs.
Packaged	30 lbs.
Dimensions	
Unit	20.5" x 11.5" x 8"

LitePro Accessories

The following accessories are available for the LitePro projectors. Standard accessories are shipped with the unit.

Part Number	Description
010-0060-XX	LitePro User's Guide (Standard)
010-0061-XX	LS Software User's Guide (Standard with LS option)
110-0079-XX	Soft carrying case (Standard)
210-0014-XX	Analog cable (Standard)
210-0053-XX	3-male RCA to 3-male RCA AV cable (Standard with LitePro 550)
210-0055-XX	RS-232 cable
210-0059-XX	SCART cable
232-0020-XX	Projection Lamp (Standard)
340-0148-XX	Lens Cover (Standard)
515-0025-XX	RS-232 adapter
516-0003-XX	Mac II adapters (Standard)
590-0095-XX	Remote Control (Standard)
599-0062-XX	LiteShow System Disk (Standard with LS option)
599-0063-XX	LiteShow Demo Disk (Standard with LS option)
749-0010-XX	5x20mm 6.3 Amp, 250V fuse (220-240V countries)
749-0011-XX	5x20mm fuse holder (220-240V countries)
749-0013-XX	3AB, 10 Amp fuse (100-120V countries)
749-0014-XX	3AB, 10 Amp fuse holder (100-120V countries)
3000VX	Video Adapter (LitePro 540 only)

▼ Graphics & Video Standards

Most of the world's television signals are broadcast in three standards: NTSC, PAL, and SECAM. These standards differ from computer graphics as explained in this appendix. The end of this appendix describes the compatibility of the LitePro projectors with the computer graphics and video standards.

About Broadcast Video

NTSC (National Television Standards Committee) standard signals are broadcast in North America and some parts of South America. NTSC is a 60 Hz standard (to match the 60 Hz wall current available in countries where it is used) having a 525-line resolution. The LitePro can project an NTSC signal at 640 x 480 resolution.

PAL (Phase Alternating Line) standard signals are broadcast in Europe, Australia, China, and some South American and African countries. PAL is a 50 Hz standard that matches the wall current frequency in the countries where it is used. A PAL signal has 768 x 576 resolution, which can be either cropped or compressed for projection through the LitePro.

SECAM (Sequentiel Couleur à Mémoire) standard signals are similar to PAL signals. In fact, resolution and frequency of PAL and SECAM are identical. The difference between the two standards is the way in which color information is encoded on the broadcast signal. SECAM standard is broadcast in France, the Commonwealth of Independent States, and some African, Eastern European, and Middle Eastern countries.

Broadcast-type video (produced by VCRs, laser-disc players, and camcorders) is typically sent and received in one of two formats: Composite or S-Video. Composite video carries sync, luminance (the black and white part of the video signal), and color information on one signal. Composite video connectors have a signal pin and a ground connection.

S-Video separates luminance and sync from color information. Because of the separated signals, this format typically produces higher quality displays (better colors, less noise). S-Video connectors have four pins in a larger-diameter connector housing that is also the ground. However, S-Video is typically not recommended for long distances due to signal degradation.

Computer Video

Unlike encoded broadcast video signals, computer video signals are generated as separate red, green, blue, H-sync, and V-sync (or red, green, blue, and composite sync on the Macintosh) components. This type of signal is called RGB, or red, green, blue.

LitePro Compatibility

The LitePro projector provides an image resolution of 640 by 480 pixels, with up to 1.44 million displayable colors, and is compatible with the types of computer graphics listed in the following table. In addition, the graphics and video input connectors of the LitePro projector are compatible with the types of computer graphics and video signals shown in the second table.

Computer Type	Graphics Standard
IBM PC, XT, AT, PS/2 or Compatible	VGA, S-VGA*, MCGA, MDA, Hercules, Hercules+
Macintosh II-Style, LC, Quadra, or Performa	Standard graphics, 8-bit color, or 24-bit color* 12", 13", 14" monitor

*640 x 480 resolution mode only

The composite RCA cable supplied with the projector or an S-video (Y/C) cable can be used to connect the NTSC, PAL, or SECAM video source directly to the projector through the appropriate input connector. The LitePro projects an NTSC video signal at it standard 640 x 480 resolution; however, the 768 x 576 resolution of a PAL or SECAM signal is cropped or compressed by the LitePro circuitry before it is projected in 640 x 480 resolution.

You can connect either composite or S-Video to the SOURCE 3 and SOURCE 4 input connectors of the LitePro; however, you cannot simultaneously use both the composite and S-video connectors for video input. The third type of video connector (SOURCE 2) accepts RGBHV video signals, such as is produced by professional video equipment, and can also be used to connect a second computer to the projector.

Graphics/ Video	Compatible with SOURCE 1?	Compatible with SOURCE 2?	Compatible with SOURCE 3?	Compatible with SOURCE 4?
VGA	Yes[1]	Yes[2]	No	No
Macintosh	Yes[3]	Yes[4]	No	No
Composite	No	No	Yes[5]	Yes[5]
S-Video	No	No	Yes[6]	Yes[6]
RGBHV (NTSC, PAL, SECAM)	Yes[4]	Yes[7]	No	No

[1] Use supplied VGA cable

[2] Use standard monitor cable

[3] Use supplied VGA cable with adapters

[4] Use special cable

[5] Use supplied AV cable

[6] Use S-Video cable

[7] Use RGB-to-BNC cable

The COMPUTER data input is a 26-pin micro-D-style connector. The table below shows the pin assignments for this connector.

Pin	Signal Description
1	Vertical sync input
2	Horizontal sync input
3	Blue digital output
4	Red digital output
5	Green analog output
6	Intensity digital output
7	Green digital input
8	Blue analog input
9	Red analog input
10	Vertical sync output
11	Horizontal sync output
12	Intensity digital output
13	Green digital output
14	Blue analog output
15	Red analog output
16	Blue digital input
17	Red digital input
18	Green analog input
19	Monochrome digital output
20-22	GND
23	Digital/analog video cable ID pin
24	GND
25	VGA/no video cable ID pin
26	Monochrome digital input (Hercules)

The video RGB input is a 15-pin micro-D-style connector. The table below shows the pin assignments for this connector.

Pin	Signal Description
1	Red analog input
2	Green analog input with composite sync
3	Blue analog input
4-5	GND
6	Red GND
7	Green GND
8	Blue GND
9	NC
10	Sync GND
11	GND
12	NC
13	Horizontal sync/composite sync input
14	Vertical sync input
15	NC

The RS-232 serial connector is an RJ-11 modular jack connector. The table below shows the pin assignments for this connector.

Pin	Signal Description
1	RxD (connect to TxD of PC)
2	GND
3	TxD (connect to RxD of PC)
4	RxD (LS)
5	GND
6	TxD (LS)

▼ Portable & Laptop Activation Chart

Computer	Activate Port Key Command	De-Activate Key Command
Acer	Ctrl Alt Esc (for set-up)<	Ctrl Alt Esc (for set-up)
AST	FN-D or Ctrl-D	<-Same As
	Ctrl-FN-D	<-Same As
	FN-F5	<-Same As
	Type from A:/IVGA/CRT	Reboot
Austin	Ctrl-Alt-,,	Ctrl-Alt-.
Altima#	Shift-Ctrl-Alt-C	Shift-Ctrl-Alt-L
	Setup VGA/Conf.Simulscan	<-Same As
Amrel# *	set-up menu	<-Same As
	Shift-Ctrl-D	<-Same As
Apple	See Mac-Pwrbk's	<-Same As
BCC	Automatic	Reboot
Bondwell	LCD or CRT option	<-Same As
Chaplet*	set-up screen	<-Same As
Commax	Ctrl-Alt-#6	Ctrl-Alt-#5
Compaq*	Ctrl-Alt-<	Ctrl-Alt->
	FN-F4	F<-Same As
Data General	Ctrl-Alt-Command	<-Same As
Data Gen-Walkabout	2 CRT/X at DOS Prompt	Reboot
Datavue	Ctrl-Shift-M	<-Same As
Dell#	Ctrl-Alt-<	Ctrl-Alt->
	Ctrl-Alt-F10	<-Same As
Digital	Automatic	Reboot
	FN-F2	<-Same
Dolch	Dip Switch to CRT	Dip switch to LCD
Epson	Dip switch to CRT	Dip switch to LCD
Everex*	Setup screen option	<-Same As
For-A	Ctrl-Alt-Shift-C	Ctrl-Alt-Shift-L
Gateway 2000	FN-F1	<-Same As
Grid# *	FN-F2 choose auto or simult.	FN-F2
	Ctrl-Alt-Tab	<-Same As
Hyundai	Set-up screen option	<-Same As
IBM 970	Automatic	Warm Reboot
IBM Thinkpads	Setup screen option	<-Same As
Kaypro	Boots up with display plugged in	Warm Reboot
Kris Tech*	FN-F8	<-Same As

Computer	Activate Port Key Command	De-Activate Key Command
Mac Portables	No video port	<-Same As
Mac Pwrbook		
100,140	No video port/3rd party interface	<-Same As
145,170	No video port/3rd party interface	<-Same As
160,165	Automatic/Set Mirroring option	Warm Reboot
230	Needs Apple Docking Station	<-Same As
180,250	Automatic/Set Mirroring option	Warm Reboot
Micro Express	Automatic	Warm Reboot
Microslate	Automatic	Warm Reboot
Mitsubishi	SW2 On-Off-Off-Off	SW2 Off-On-On-On
NCR	Set-up screen option	<-Same As
NEC#	Set-up screen option	<-Same As
	CRT at DOS prompt	LCD at DOS Prompt
Packard Bell#	FN-F2	<-Same As
	Ctrl-Alt-<	Ctrl/Alt/>
Panasonic	FN-F2	<-Same As
Samsung*	Set-up screen option	<-Same As
Sanyo	Set-up screen option	<-Same As
Sharp	Dip switch to CRT	Dip switch to LCD
Sparc-Dataview	Ctrl-Shift-M	<-Same As
Tandy#*	Ctrl-Alt-Insert	<-Same As
	Set-up screen option	<-Same As
Texas Instruments*	Set-up screen option	<-Same As
Top-Link#*	Set-up screen option	<-Same As
	FN-F6	<-Same As
Toshiba#*	Ctrl-Alt-End	Ctrl-Alt-Home
	FN-End	FN-Home
4500	FN-F5	<-Same As
	Set-up screen option	<-Same As
Wyse	Software Driver	<-Same As
Zenith	FN-F10	<-Same As
Mastersport	FN-F2	FN-F1

In most laptops when an external display is connected, the video on the internal screen will be disabled.

* These manufacturers have other models which automatically send video out to the external CRT port when some type of display is attached.

These manufacturers offer more than one key command depending on the computer model.

Index

A

accessories B-3
activation chart D-1
audio
  connecting 2-10
  control 3-10
  in 2-10
  locking 3-12
  loudness filter 3-13
  muting 3-12
  out 2-12
auto level function 3-17
auto standby function 3-21

B

balance adjustment 3-11
bass adjustment 3-11
battery replacement 4-4
brightness adjustment 3-6
Bulb Guard
  lamp blinks 4-3
bulb replacement 4-2
bulb switching 3-5
button functions A-1

C

cables 1-1
centering an image 3-7
clearing the projection screen 3-9
coaxial cable 2-8
color adjustment 3-8
color inverse 3-9
color palette 3-8
compatibility C-2
composite video signal 2-8
computer port 2-3
connections 2-3
  audio source 2-10
  composite video 2-8
  external sound system 2-12
  IBM-compatible desktop 2-4
  IBM-compatible laptop 2-6
  Macintosh II-Style desktop 2-5
  microphone 2-11
  monophonic source 2-10
  PowerBook 2-5
  public address system 2-12
  S-Video 2-9
  video source 2-7
customer service 5-4

D

disk drive 2-15
display cards 1-4
display mode 3-3

E

external sound system 2-12

F

fade adjustment 3-11
focusing the image 3-5
freeze 3-15
fuse replacement 4-4

G

graphics
  control 3-14
  information 3-18
  ports 1-4

H

height adjustment 3-5

I

IBM-compatible computers 1-4

L

lamp blinks 4-3
lamp replacement 4-2
lamp switching 3-5
language selection 3-19
LitePro
  accessories B-3
  compatibility C-2
  components 1-1
  product description 1-2
  specifications B-1
LiteShow 2-15
LiteShow mode 3-3
LiteTools 1-2

M

Macintosh Classic-style computers 1-4
Macintosh II-style computers 1-4
menu defaults 3-4
menu language 3-19
menu mode 3-3
menus A-4
  functions A-5
  option, adjusting A-4
  using A-4
microphone 3-13
  connecting 2-11
moving through menus 3-4

N

NTSC
  description 1-2, 2-7, C-1
  selecting 3-16

O

operating mode control 3-3

P

PAL
  description 1-2, 2-7, C-1
  selecting 3-16
pause 3-15
pixel slice adjustment 3-15
power switch 2-13
power up sequence 2-13
PROG function 3-22
projected image size 2-1
projection lens 4-1
public address system 2-12

R

RCA video connector 2-8
rear projection 3-19
remote control 3-2
RGBHV 2-7
RS-232 port 3-21

S

S-Video 2-7, 2-9
SECAM
  description 1-2, 2-7, C-1
  selecting 3-16
selecting menu defaults 3-4
SOURCE
  description 2-7
  selecting 3-14
source prompt 3-20
specifications B-1
sync setting 3-7

T

test pattern
  disabling 3-20
text mode adjustment 3-15
tint adjustment 3-7
tracking adjustment 3-17
treble adjustment 3-11
troubleshooting 5-1

V

video
  compression 3-16
  connecting 2-7
  control 3-14
video standards C-1
volume adjustment 3-10

LIMITED WARRANTY

In Focus Systems Inc. ("In Focus") warrants that each projector ("the Product") sold hereunder will conform to and function in accordance with the written specifications of In Focus. Said limited warranty shall apply only to the first person or entity that purchases the Product for personal or business use and not for the purpose of distribution or resale. Said warranty shall continue for a period of one (1) year from the date of such purchase. In Focus does not warrant that the Product will meet the specific requirements of the first person or entity that purchases the Product for personal or business use.

In Focus' liability for the breach of the foregoing limited warranty is limited to the repair or replacement of the Product or refund of the purchase price of the Product, at In Focus' sole option. To exercise the Purchaser's rights under the foregoing warranty, the Product must be returned at the Purchaser's sole cost and expense, to In Focus or to any authorized In Focus service center provided, however, that the Product must be accompanied by a written letter explaining the problem and which includes (i) proof of date of purchase; (ii) the dealer's name; and (iii) the model and serial number of the Product. A return authorization number, issued by the In Focus customer service department, must also be clearly displayed on the outside of the shipping carton containing the Product.

WARRANTY LIMITATION AND EXCLUSION

In Focus shall have no further obligation under the foregoing limited warranty if the Product has been damaged due to abuse, misuse, neglect, accident, unusual physical or electrical stress, unauthorized modifications, tampering, alterations, or service other than by In Focus or its authorized agents, causes other than from ordinary use or failure to properly use the Product in the application for which said Product is intended.

DISCLAIMER OR UNSTATED WARRANTIES

THE WARRANTY PRINTED ABOVE IS THE ONLY WARRANTY APPLICABLE TO THIS PURCHASE. ALL OTHER WARRANTIES, EXPRESS OR IMPLIED, INCLUDING, BUT NOT LIMITED TO, THE IMPLIED WARRANTIES OF MERCHANTABILITY AND FITNESS FOR A PARTICULAR PURPOSE ARE DISCLAIMED. THERE ARE NO WARRANTIES THAT EXTEND BEYOND THE FACE HEREOF AND THE FOREGOING WARRANTY SHALL NOT BE EXTENDED, ALTERED OR VARIED EXCEPT BY WRITTEN INSTRUMENT SIGNED BY IN FOCUS.

LIMITATION OF LIABILITY

IT IS UNDERSTOOD AND AGREED THAT IN FOCUS' LIABILITY WHETHER IN CONTRACT, IN TORT, UNDER ANY WARRANTY, IN NEGLIGENCE OR OTHERWISE SHALL NOT EXCEED THE RETURN OF THE AMOUNT OF THE PURCHASE PRICE PAID BY PURCHASER AND UNDER NO CIRCUMSTANCES SHALL IN FOCUS BE LIABLE FOR SPECIAL, INDIRECT OR CONSEQUENTIAL DAMAGES. THE PRICE STATED FOR THE PRODUCT IS A CONSIDERATION IN LIMITING IN FOCUS' LIABILITY. NO ACTION, REGARDLESS OF FORM, ARISING OUT OF THE AGREEMENT TO PURCHASE THE PRODUCT MAY BE BROUGHT BY PURCHASER MORE THAN ONE YEAR AFTER THE CAUSE OF ACTION HAS ACCRUED.