Infoto PCL-LT112WT



3LCD | Kurzdistanz | WiFi Optional | HDMI MHL | Netzwerk | USB

Brief Introduction Beta 2.5	With the PCL-LT112WT, manufacturer Infoto offers a short-throw LCD projector with WXGA 1280 x 800 resolution and a contrast of 15000:1. The service life of the lamp is up to 10,000 hours, which is equivalent to over 13.7 years at 2 hours per day. This projector has a projection ratio of just 0.46:1. For a 2 m wide image, the projector only needs to be 92 cm away from the screen. The HDMI MHL (Mobile High-Definition Link) port allows 1080p / 60 Hz image mirroring (screen mirroring) to be transmitted from a smartphone while it is being charged at the same time via the connection. It is also Full HD 1080P compatible. This model is no longer offered by Infoto.
Display Type	3 x 0,59" LCD TFT Panel WXGA 16/10 Liquid Crystal Display
Projector: Ansi-Lumen	4000
Projector: Contrast	15000:1 full on/off
Projector: Black Level	0,2667 min. Lumen
Projector: Offset	-
Screen: Ansi-Lumen	1600 Lux (bei 200 cm Screen)
Screen: Contrast	15000:1 full on/off
Screen: Black Level	0,107 min. Lumen
Resolution	WXGA 1280 x 800 1.024.000 Pixel WUXGA 1920 x 1200 compressed
Video Modes	Pal, SECAM, NTSC, HDTV 720p, 1080i, 1080p EDTV 480p, 576p
Disc Recognition	DVD | HD Blu-ray (komprimiert) | ~~3D Blu-ray~~ | ~~4K UHD Blu-ray~~
Application	Short Distance | Wide screen width or rooms with plenty of light (over 200 lumens).
Light Source	218W UHP Lamp
Light Life	6000 h. 10000 h. in Eco Mode
Operating Costs	-
Focus	Manual
Zoom	No Zoom
Objective	F=1,8 f=6,08mm
Throw Ratio	0,46:1
Audio	-
Connections	2 x HDMI mit MHL in 2 x D-sub 15pin in 1 x out Cinch Video in Cinch Stereo in USB Typ A,B in Mini Jack Audio in und out RS232C Din 9 pin in RJ45 in
Ceiling Mounting	Yes
Power	-
Size WxHxD	347 x 109 x 341 mm (13,7"x4,3"x13,4") 12,9 L/dm³
Operating Noise	-
Weight	4,00 kg / 8,82 lbs.
Keystone	Vert.: +/-30°
Illumination	90%

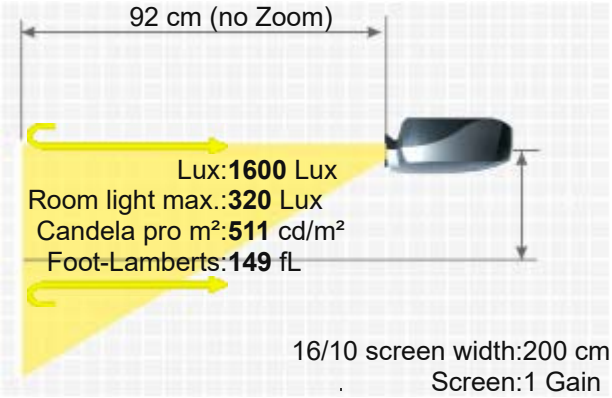



INFOTO PCL-LT112WT

Frequenz	H-sync: 15-100 kHz V-sync: 48-85 Hz
Foot-Lamberts	149 fL / max. 643 cm screen width
	511 cd/m²
Features	■ Full HD 1080P compatible ■ User logo ■ Eco Mode ■ Kensington Slot ■ Optional Wi-Fi network compatible. ■ Lan network compatible. ■ Short-throw projector
Status Data	2016 Discontinued (EOL) // Last update of the data: 2024-06-19
More Details	https://www.projector-database.com/pro/infotoPCLLT112WT-en.html



Due to our ongoing commitment to continuously improve the quality of our projector database, this brochure is also subject to change without notice. HCinema is not responsible for any errors or omissions contained in product descriptions.