LG PH300S



Brief Introduction Beta 2.5	The PH300S LED DLP projector from LG has 300 Ansi lumens, a contrast of 100000:1 and an HDTV 1280 x 720 resolution. The manufacturer specifies an LED service life of 30,000 hours, which converts to over 20.5 years at 4 hours of use. Including an integrated media player with which files can be played directly. Thanks to the brightness of 300 Ansi lumens, a picture width of 176 cm is possible. In room light, the picture should be max. 117 cm wide. Thanks to the built-in rechargeable battery, the projector does not require a power supply for 2 hours, so it can be set up spontaneously and easily anywhere. A smartphone with MHL connection can be connected directly to the MHL/HDMI port and transmit a 1080p / 60 Hz image mirroring (screen mirroring) while the smartphone is being charged at the same time. The projector was launched in 2014 and is no longer sold by the manufacturer, but is still a very popular projector.
Display Type	1 x DLP Chip HDTV 16/9 Ti Digital Light Processing Chip
Ansi-Lumen	Projector: 300 / Screen: 133 Lux (bei 200 cm Screen)
Contrast	Projector: 100000:1 full on/off / Screen: 100000:1 full on/off
Black Level	Projector: 0,0030 min. Lumen / Screen: 0,001 min. Lumen
Offset	-
Resolution	HDTV 1280 x 720 921.600 Pixel
Video Modes	Pal, SECAM, NTSC, HDTV 720p, 1080i, EDTV 480p, 576p **Media player formats:** DivX, MP3, Photo XLS, XLSX, DOC, DOCX, PPT, PPTX, TXT, PDF, HWP Microsoft Office: 97/2000/2002/2003/2007 Version Adobe PDF: 1.0/1.1/1.2/1.3/ 1.4 Version Hangul: 97/2003/2007 Version
Application	Game-Portabel | Very portable, small-screen projections. Very narrow picture width and rooms with very little light.
Light Source	LED
Light Life	30000 h.
Operating Costs	0,00 € LED
Focus	-
Zoom	-
Objective	-
Throw Ratio	-
Audio	2 x 3W
Connections	HDMI mit MHL in USB Typ A in
Ceiling Mounting	-
Power	45W
Size WxHxD	-

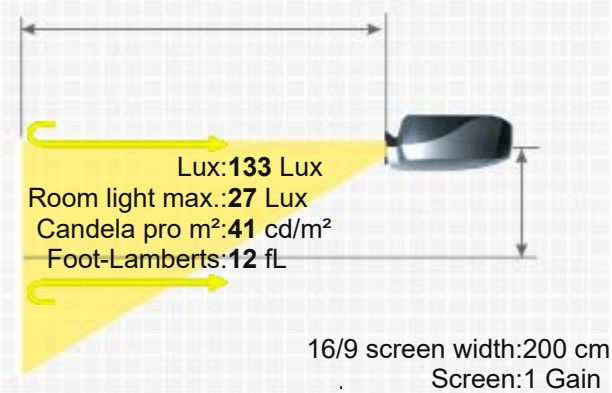

LG PH300S

Operating Noise	-
Weight	-
Keystone	-
Illumination	-
Frequenz	-
Foot-Lamberts	12 fL / max. 176 cm screen width 41 cd/m²
Features	■ Integrated Mediaplayer ■ 2 Std.
Status	2014 Discontinued (EOL) // Last update of the data: 2024-10-02
Data	Created: 2015-01-06 11:47:56
More Details	HCinema https://www.projector-database.com/pro/lgph300s-en.html

Due to our ongoing commitment to continuously improve the quality of our projector database, this brochure is also subject to change without notice. HCinema is not responsible for any errors or omissions contained in product descriptions.