Lightware VP100



LIGHTWARE VP100

Brief Introduction Beta 2.5	A brief introduction to the Lightware VP100. The LCD projector has a VGA 640 x 480 resolution and a contrast of 100:1. Due to the brightness of 330 Ansi lumens, a picture width of 158 cm is possible. In room light, the picture should be max. 105 cm wide. The model was built by Lightware in 1996 and is no longer current. It should also be noted that, unfortunately, there are no more replacement lamps for the projector, neither originals nor replicas.
Display Type	1 x 6,4" LCD TFT Panel VGA 4/3 Liquid Crystal Display

	Projector	Screen
Ansi-Lumen	330	107 Lux (bei 203 cm Screen)
Contrast	100:1 full on/off	100:1 full on/off
Black Level	3,3000 min. Lumen	1.103 min. Lumen
Offset	-	

Resolution	VGA 640 x 480 307.200 Pixel SVGA 800 x 600 compressed
Video Modes	NTSC, PAL, SECAM
Application	Standard-Portabel | External training and company presentations, as well as product presentations. Very narrow picture width and rooms with very little light.
Light Source	400W Halogen Lamp Articel Nr.: LA801
Light Life	300 h.
Operating Costs	-
Focus	Manual
Zoom	Manual 1,13
Objective	f=206-232 mm
Throw Ratio	1,58-1,78:1
Audio	2 x 3W
Connections	INPUTS: 1 Composite 1 S-Video 1 SVGA Monitor 2 RCA Stereo pairs OUTPUTS: 1 SVGA Monitor 1 RCA Stereo pLuft
Ceiling Mounting	Nein
Power	550W
Size WxHxD	320 x 130 x 280 mm (12,6"x5,1"x11") 11,65 L/dm³
Operating Noise	-

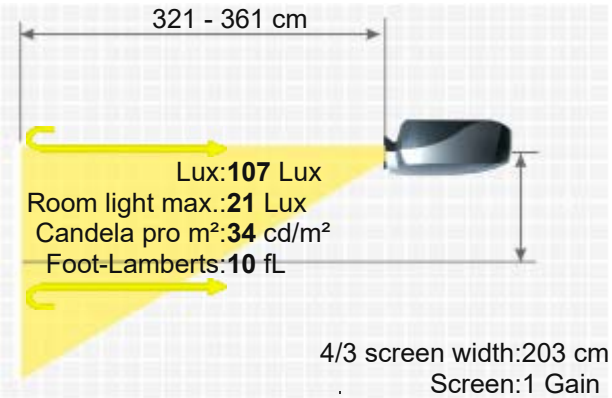

Weight	4,20 kg / 9,26 lbs.
Keystone	-
Illumination	-
Frequenz	H-sync: 15,0-50,0 kHz V-sync: 50-85 Hz
Foot-Lamberts	10 fL / max. 158 cm screen width 34 cd/m²
Features	-
Status	1996 Discontinued (EOL) // Last update of the data: 2023-08-04

Data



More Details

https://www.projector-database.com/pro/lightwarevp100-en.html

Due to our ongoing commitment to continuously improve the quality of our projector database, this brochure is also subject to change without notice. HCinema is not responsible for any errors or omissions contained in product descriptions.