Liweitec Relaxsee LV VB03



LED

Brief Introduction Beta 2.5	A brief introduction to the Relaxsee LV VB03: The Liweitec LED LCOS projector offers 12 Ansi lumens, a contrast of 100:1 and a VGA 640 x 480 resolution. Thanks to the LEDs, the projector is specified with a lamp life of 20000 hours, which is over 13.7 years if enjoyed for four hours a day. The projector was launched in 2010 and is no longer sold by the manufacturer, but is still a popular projector in our database.
Display Type	1 x Lcos Panel VGA 4/3 Liquid Crystal on Silicon (LCOS)

	Projector	Screen
Ansi-Lumen	12	4 Lux (bei 200 cm Screen)
Contrast	100:1 full on/off	100:1 full on/off
Black Level	0,1200 min. Lumen	0,041 min. Lumen

Offset	-
Resolution	VGA 640 x 480 307.200 Pixel
Video Modes	PAL, SECAM, NTSC,
Application	Game-Portabel | Very portable, small-screen projections. Very narrow picture width and rooms with very little light.
Light Source	LED
Light Life	20000 h.
Operating Costs	0,00 € LED
Focus	Manual
Zoom	No Zoom
Objective	-
Throw Ratio	-
Audio	-
Connections	-
Ceiling Mounting	-
Power	5W
Size WxHxD	93 x 21,5 x 65,5 mm (3,7"x0,8"x2,6") 0,13 L/dm³
Operating Noise	-

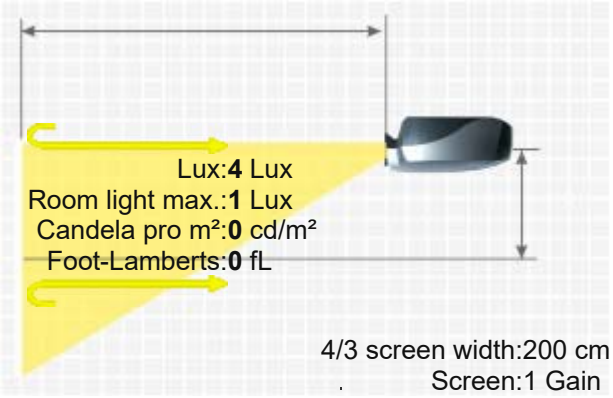

Weight	0,090 kg / 0,2 lbs.
Keystone	-
Illumination	-
Frequenz	-
Foot-Lamberts	-
	-
Features	-
Status	2010 Discontinued (EOL) // Last update of the data: 2023-08-04
Data	

LIWEITEC RELAXSEE LV VB03

More Details

HCinema

https://www.projector-database.com/pro/liweiteclvvb03-en.html

Due to our ongoing commitment to continuously improve the quality of our projector database, this brochure is also subject to change without notice. HCinema is not responsible for any errors or omissions contained in product descriptions.