Lumex Smart 600





Brief Introduction Beta 2.5	The Smart 600 LED DLP projector from Lumex has 600 Ansi lumens, a contrast of 1000:1 and a WXGA 1280 x 800 resolution. Due to the LEDs, the projector is specified with 30000 hours of light life, which is equivalent to over 20.5 years at 4 hours per day. The projector is equipped with an integrated media player, so direct playback of files will not be a problem. 600 Ansi lumens ensure that a picture width of 249 cm is also possible. However, if room light is available, the picture should be a maximum of 166 cm wide. On the market since 2015, the model is no longer offered by the manufacturer Lumex.
Display Type	1 x DLP Chip WXGA 16/10 Ti Digital Light Processing Chip
Ansi-Lumen	Projector: 600 / Screen: 240 Lux (bei 200 cm Screen)
Contrast	Projector: 1000:1 full on/off / Screen: 1000:1 full on/off
Black Level	Projector: 0,6000 min. Lumen / Screen: 0,241 min. Lumen
Offset	
Resolution	WXGA 1280 x 800 1.024.000 Pixel
Video Modes	Pal, SECAM, NTSC, HDTV 720p, 1080i, EDTV 480p, 576p **Media player formats:** JPEG/JPEG/BMP/PNG MPEG MPEGCMPGCAVICMP4CXVIDCDATCRMCRMVBCDIVXCH.264
Application	Micro-Portabel | Small mobile presentations.. Small screen width, rooms with very little ambient light below 100 lumens.
Light Source	RGB LED
Light Life	30000 h.
Operating Costs	0,00 € LED
Focus	Manual
Zoom	No Zoom
Objective	-
Throw Ratio	1,2:1
Audio	3W Mono
Connections	HDMI in D-sub 15pin in Mini Jack Audio in und out USB in Micro SD
Ceiling Mounting	-
Power	-
Size WxHxD	150 x 44 x 108 mm (5,9"x1,7"x4,3") 0,71 L/dm³
Operating Noise	-
Weight	0,100 kg / 0,22 lbs.
Keystone	-
Illumination	-

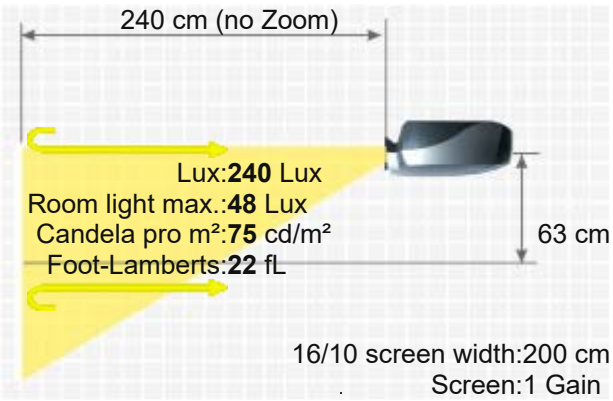

LUMEX SMART 600

Frequenz	-
Foot-Lamberts	22 fL / max. 249 cm screen width
	75 cd/m²
Features	■ Integrated Mediaplayer ■ Internal Memory 8 GB ■ Android ■ Bluetooth
Status	2015 Discontinued (EOL) // Last update of the data: 2024-10-02
Data	
More Details	https://www.projector-database.com/pro/lumexsmart600-en.html

Due to our ongoing commitment to continuously improve the quality of our projector database, this brochure is also subject to change without notice. HCinema is not responsible for any errors or omissions contained in product descriptions.