Lumex Smart Beam



DLP | Android | WiFi Integriert | Media Player | LED | USB

Brief Introduction Beta 2.5	The game portable Smart Beam LED DLP projector from Lumex has 80 Ansi lumens, a contrast of 10000:1 and a WVGA 854 x 480 resolution. The lifespan of the LEDs is 10000 hours, which is over 6.8 years with a daily viewing time of 4 hours. Includes an integrated media player that can be used to play files directly. An image width of up to 91 cm is possible as the projector has 80 Ansi lumens. However, if room light is available, the picture should be max. 61 cm wide. This model is no longer offered by Lumex.
Display Type	1 x DLP Chip WVGA 16/9 Ti Digital Light Processing Chip
Projector: Ansi-Lumen	80
Projector: Contrast	10000:1 full on/off
Projector: Black Level	0,0080 min. Lumen
Screen	36 Lux (bei 200 cm Screen) 10000:1 full on/off 0,004 min. Lumen
Offset	-
Resolution	WVGA 854 x 480 409.920 Pixel
Video Modes	Pal, SECAM, NTSC, HDTV 720p, 1080i, EDTV 480p, 576p **Media player formats:** MPEGCMPGCAVICMP4CXVIDCDATCRMCRMVBCDIVXCH.264 MP3CWMACWAV, AAC
Application	Game-Portabel | Very portable, small-screen projections. Very narrow picture width and rooms with very little light.
Light Source	LED (RGB)
Light Life	10000 h.
Operating Costs	0,00 € LED
Focus	Manual
Zoom	No Zoom
Objective	-
Throw Ratio	1,6:1
Audio	1,5W Mono
Connections	HDMI in DVI in D-sub 15pin in und out Cinch Video in Cinch Stereo in S-Video in Mini Jack Audio in und out USB in RS232C Din 9 pin in Micro SD slot
Ceiling Mounting	-
Power	-
Size WxHxD	85 x 34 x 85 mm (3,3"x1,3"x3,3") 0,25 L/dm³
Operating Noise	-
Weight	-
Keystone	-
Illumination	-

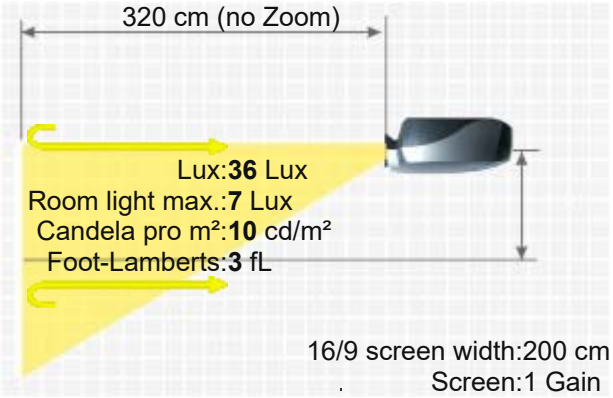

LUMEX SMART BEAM

Frequenz	-
Foot-Lamberts	3 fL / max. 91 cm screen width 10 cd/m²
Features	■ Integrated Mediaplayer ■ Wi-Fi network compatible. ■ Iternal Memory 4GB ■ Built In, 3.7 V, 2600 mAh, Li-polymer Rechargeable Battery ■ Micro SD Slot ■ Android
Status Data	- Discontinued (EOL) // Last update of the data: 2023-08-04
More Details	https://www.projector-database.com/pro/lumexsmartbeam-en.html

Due to our ongoing commitment to continuously improve the quality of our projector database, this brochure is also subject to change without notice. HCinema is not responsible for any errors or omissions contained in product descriptions.