Megapower ML 162D



Brief Introduction Beta 2.5	The ML 162D LCD has 1800 Ansi lumens, a contrast of 450:1 and an SVGA 800 x 600 resolution. An image width of up to 369 cm is possible as the projector has 1800 Ansi lumens. However, if room light is available, the picture should be max. 246 cm wide. On the market since 2005, the model is no longer offered by the manufacturer Megapower.
Display Type	3 x 0,7" LCD TFT Panel SVGA 4/3 Liquid Crystal Display
Ansi-Lumen	Projector: 1800 / 1700 alt — Screen: 582 Lux (bei 203 cm Screen)
Contrast	Projector: 450:1 full on/off — Screen: 450:1 full on/off
Black Level	Projector: 4,0000 min. Lumen — Screen: 1.302 min. Lumen
Offset	-
Resolution	SVGA 800 x 600 480.000 Pixel XGA 1024×768 compressed
Video Modes	Pal, Secam, NTSC
Application	Standard-Portabel | External training and company presentations, as well as product presentations. Small screen width, rooms with very little ambient light below 100 lumens.
Light Source	165W Lamp Articel Nr.: ML162DLM
Light Life	2000 h.
Operating Costs	-
Focus	Manual
Zoom	Manual 1,23
Objective	F=1,7-2,1 f=26-32 mm
Throw Ratio	1,83-2,25:1
Audio	-
Connections	RGB (D-Sub 15 pin) x 1, S-Video (Mini DIN 4 pin) x 1, Composite Video x 1, Components Video x 1
Ceiling Mounting	Yes
Power	230W
Size WxHxD	297 x 93 x 233 mm (11,7"x3,7"x9,2") 6,44 L/dm³
Operating Noise	37dB

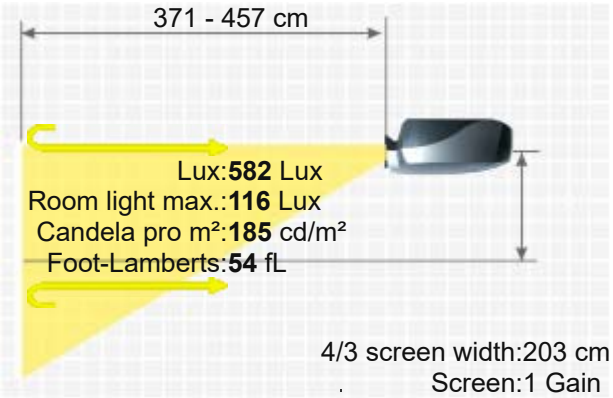

Key: 99 cm

MEGAPOWER ML 162D

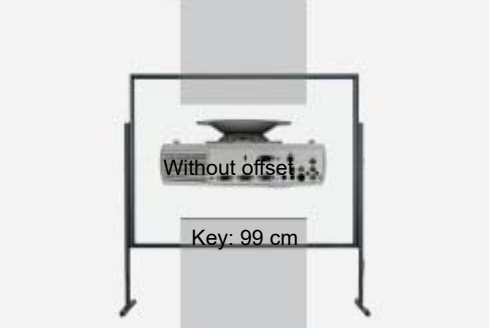

Weight	3,10 kg / 6,83 lbs.
Keystone	Vert.: +/-15°
Illumination	85%
Frequenz	H-sync: 15-80 kHz V-sync: 43-85 Hz
Foot-Lamberts	54 fL / max. 369 cm screen width 185 cd/m²
Features	■ Freeze ■ Picture-in-Picture ■ Remote control with laser pointer
Status	2005 Discontinued (EOL) // Last update of the data: 2023-08-04

Data



More Details

HCinema

https://www.projector-database.com/pro/megapowerml162d-en.html

Due to our ongoing commitment to continuously improve the quality of our projector database, this brochure is also subject to change without notice. HCinema is not responsible for any errors or omissions contained in product descriptions.