# Nec M361X




| | |
|---|---|
| Brief Introduction<br>Beta 2.5 | The standard portable M361X LCD projector from Nec has 3600 Ansi lumens, a contrast of 3000:1 and an XGA 1024 x 768 resolution. The lamp life is up to 4000 hours, which is over 5.5 years if enjoyed for two hours a day. The integrated media player can play files directly. An image width of up to 523 cm is possible as the projector has 3600 Ansi lumens. The projector can create rooms with residual light with a smaller image width, we recommend a maximum of 349 cm. Playing 1080P is also no problem for the projector. This model is no longer offered by Nec. |
| Display Type | 3 x 0,63" LCD TFT Panel mit MLA<br>XGA 4/3 Liquid Crystal Display with Micro Lense Array |
| Ansi-Lumen | Projector: 3600 / 2700 im Eco Mode — Screen: 1200 Lux (bei 200 cm Screen) |
| Contrast | Projector: 3000:1 full on/off — Screen: 3000:1 full on/off |
| Black Level | Projector: 1,2000 min. Lumen — Screen: 0,4 min. Lumen |
| Offset | |
| Resolution | XGA 1024 x 768<br>786.432 Pixel<br>UXGA 1600 x 1200 compressed |
| Video Modes | PAL, SECAM, NTSC, HDTV 720p, 1080i, 1080p EDTV 480p, 576p<br>**Media player formats:** JPEG |
| Application | Standard-Portabel \| External training and company presentations, as well as product presentations.<br>Medium screen width or rooms with a little more ambient light, max. 200 lumens. |
| Light Source | 230 / 140W im Eco Mode Lamp<br>Articel Nr.: NP16LP / 60003120 |
| Light Life | 4000 h. 8000 h. in Eco Mode |
| Operating Costs | 14,29% / 0,06 € |
| Focus | Manual |
| Zoom | Manual 1,69 |
| Objective | F=1,7-2,1 f=17,5-29 mm |
| Throw Ratio | 1,3-2,2:1 |
| Audio | 1 x 10W |
| Connections | HDMI in<br>D-sub 15 pin in und out<br>S-Video in<br>Cinch Video in<br>Mini Jack Audio in und out |

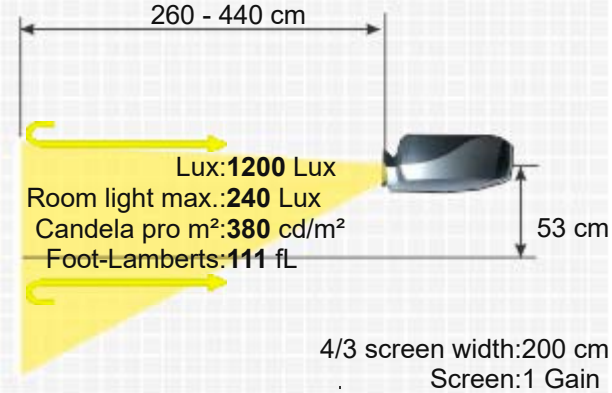


NEC M361X

| | |
|---|---|
| | RS232C Din 9 pin in<br>RJ45 in<br>USB Typ A,B |
| Ceiling Mounting | Yes |
| Power | 302W |
| Size WxHxD | 339 x 99 x 257 mm (13,3"x3,9"x10,1") 8,63 L/dm³ |
| Operating Noise | 35 / 28 dB in Eco Mode |

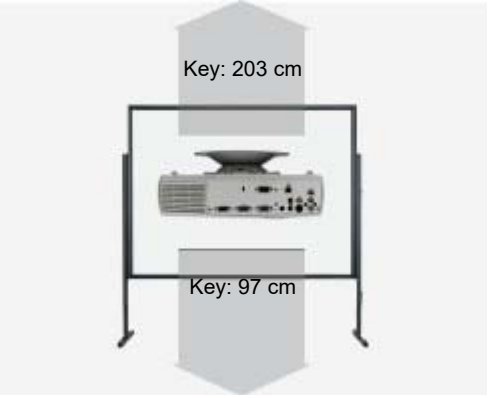


| | |
|---|---|
| Weight | 2,99 kg / 6,59 lbs. |
| Keystone | Vert.: +/-30° automatisch |
| Illumination | - |
| Frequenz | H-sync: 15-100 kHz<br>V-sync: 50-120 Hz |
| Foot-Lamberts | 111 fL / max. 523 cm screen width<br>380 cd/m² |

**Features**

- Full HD 1080P compatible
- Direkt Power Off
- Integrated Mediaplayer
- Freeze
- Blackboard Modus
- User logo
- Eco Mode
- Automatic and manual vertical keystone correction
- Kensington Slot
- Password protection
- Remote control with mouse control
- PJLink™
- Lan network compatible.

**Optional**

| | |
|---|---|
| Lamp original | NP16LP / 60003120 |
| Remote control original | Alternative zu:7N900921 / 7N900927 / RD-448E |
| Air filter package original | 24J37801 & 24J37811 & 24J37821 & 24J37831 |

**Status**

Order here: https://www.hcinema.de/lampen/shop-en.php?id=21596
2012 Discontinued (EOL) // Last update of the data: 2023-08-04
Created: 2012-10-31 14:20:15

**Data**



**More Details**

https://www.projector-database.com/pro/necm361x-en.html

Due to our ongoing commitment to continuously improve the quality of our projector database, this brochure is also subject to change without notice. HCinema is not responsible for any errors or omissions contained in product descriptions.