Nec MT850





Brief Introduction Beta 2.5	A brief introduction to the Nec MT850. The standard portable LCD projector has an SVGA 800 x 600 resolution and a contrast of 350:1. The projector is equipped with an integrated media player, so direct playback of files will not be a problem. The projector will be able to illuminate the 359 cm picture width well. However, if room lighting is available, the picture width should ideally not exceed 239 cm. The model was built by Nec 2000 and is no longer current.
Display Type	3 x 1,3" LCD TFT Panel SVGA 4/3 Liquid Crystal Display
Ansi-Lumen	Projector: 1700 / 1400 im Eco Mode — Screen: 567 Lux (200 cm Screen width)
Contrast	Projector: 350:1 full on/off — Screen: 350:1 full on/off
Black Level Offset	Projector: 4,8571 min. Lumen — Screen: 1,634 min. Lumen
Resolution	SVGA 800 x 600 480.000 Pixel XGA 1024 x 768 compressed
Video Modes	NTSC, PAL, SECAM, NTSC 4.43, Pal 60 **Media player formats:** txt, idx, HTML, JPEG und BMP
Application	Standard-Portabel | External training and company presentations, as well as product presentations. Small screen width, rooms with very little ambient light below 100 lumens.
Light Source	200W NSH / 160W Eco Mode Lamp Article Nr.: 50020066 / MT50LP
Light Life	1500 h. 2500 h. in Eco Mode
Operating Costs	-
Focus	Manual
Zoom	Manual 1,2
Objective	F=2,3-2,7 f=48,6-58,4 mm
Throw Ratio	1,8-2,2:1
Audio	2 x1W Stereo
Connections	2 xD-sub 15pin in 1 xAus. 2 xMini Jack Aus. S-Video Cinch Stereo in Fernbedienung PC Control RS 232 USB in

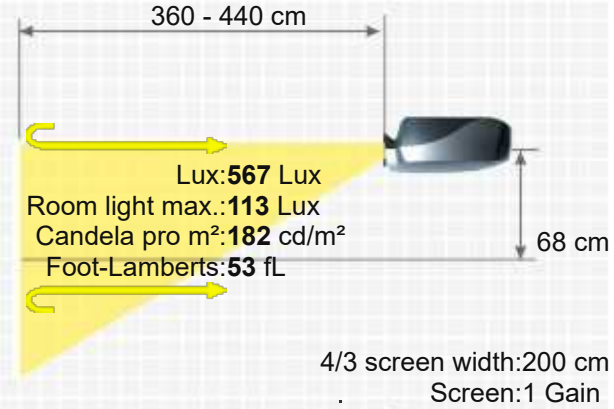

NEC MT850

	Cinch Video in PC Control RS 232 PC Karte: PCMIA Typ 2
Ceiling Mounting	Yes, is possible.
Power	350W
Size WxHxD	281 x 121 x 364 mm (11,1"x4,8"x14,3") 12,38 L/dm³
Operating Noise	42 / 38 dB in Eco Mode
Weight	5,90 kg / 13,01 lbs.
Keystone	Vert.: +/-30°
Illumination	-
Frequenz	H-sync: 15-100 kHz V-sync: 50-120 Hz
Foot-Lamberts	53 fL / max. 359 cm screen width 182 cd/m²
Features	■ Integrated Mediaplayer ■ Freeze ■ Eco Mode ■ Kensington Slot ■ Gamma correction ■ Remote control with laser pointer und mouse control ■ digital Zoom up to 400, Advanced AccuBlend ■ PCMCIA Slot: For a presentation without a computer, : improves black level
Screen Mirroring	-

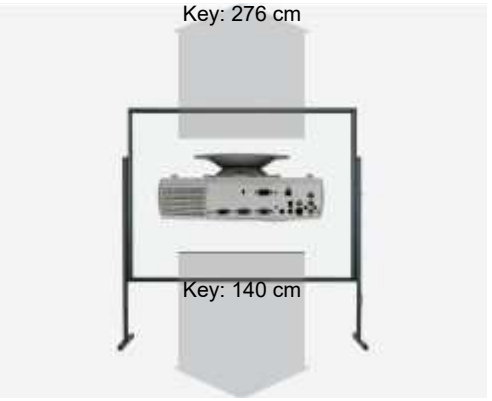

Optional accessories

	Nackte Lampe	NLMP2490	EOL €
	Lampe Ruby	Ruby-LMP2490	83,03 €
	Lampe inkl. Luftfilter Original	MT50LP / 50020066	EOL €
	Kompatible Lampe	LMP-K2490	76,12 €
	Universal Fernbedienung	Fernb-uni-V3	22,31 €
	Fernbedienung Original	7N900011 / RD-367E	EOL €
	Deckenhalterung 100-120	Halterung100	47,86 €

Optional Lenses

Name	Ratio	Distance	Shift V	Shift H	Zoom
MT13ZL	1.27-1.57:1	254-314 m	44% Fix		Manual
MT10RL	0.99:1	198 m	0.0% Fix		No Zoom

Status 2000 Discontinued (EOL) // Last update of the data: 2026-06-09

Data 

More Details

HCinema

https://www.projector-database.com/pro/necmt850-en.html

Due to our ongoing commitment to continuously improve the quality of our projector database, this brochure is also subject to change without notice. HCinema is not responsible for any errors or omissions contained in product descriptions.