nView Diamond D400

Brief Introduction Beta 2.5	A brief introduction to the Diamond D400: The nView DLP projector offers 350 Ansi lumens, a contrast of 150:1 and a VGA 640 x 480 resolution. An image width of up to 163 cm is possible as the projector has 350 Ansi lumens. However, if room light is available, the picture should be max. 109 cm wide. The model is no longer offered by nView.
Display Type	1 x DLP Chip VGA 4/3 Ti Digital Light Processing Chip
Ansi-Lumen	Projector: 350 / Screen: 117 Lux (bei 200 cm Screen)
Contrast	Projector: 150:1 full on/off / Screen: 150:1 full on/off
Black Level	Projector: 2,3333 min. Lumen / Screen: 0,796 min. Lumen
Offset	-
Resolution	VGA 640 x 480 307.200 Pixel
Video Modes	NTSC, PAL, SECAM Pal 60 NTSC 4,43
Application	Stationary | Permanent installation in the training room and meeting room as well as the conference room. Very narrow picture width and rooms with very little light.
Light Source	- Lamp
Light Life	-
Operating Costs	-
Focus	-
Zoom	-
Objective	-
Throw Ratio	-
Audio	-
Connections	-
Ceiling Mounting	-
Power	-
Size WxHxD	-
Operating Noise	-
Weight	-
Keystone	-
Illumination	-
Frequenz	-
Foot-Lamberts	11 fL / max. 163 cm screen width 38 cd/m²
Features	-
Status	- Discontinued (EOL) // Last update of the data: 2023-08-04
Data	

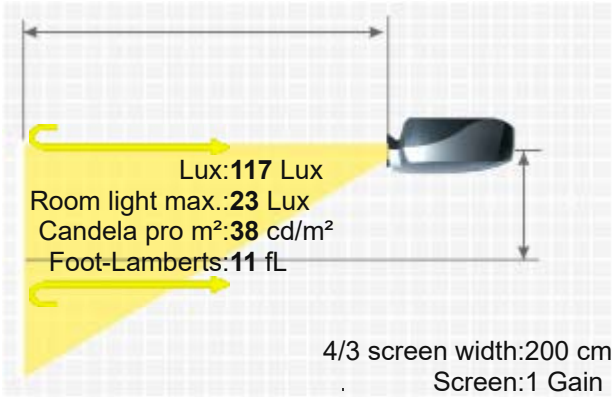

More Details

HCinema
https://www.projector-database.com/pro/nviewdiamondd400-en.html

Due to our ongoing commitment to continuously improve the quality of our projector database, this brochure is also subject to change without notice. HCinema is not responsible for any errors or omissions contained in product descriptions.

NVIEW DIAMOND D400