Optoma DH67



OPTOMA DH67

Brief Introduction Beta 2.5	With the DH67, manufacturer Optoma offers a home cinema DLP projector with HDTV 1280 x 720 resolution and a contrast of 4000:1. 1800 Ansi lumens ensure that a picture width of 431 cm is also possible. However, if room light is available, the picture should be a maximum of 287 cm wide. It is also Full HD 1080P compatible. With only 29 decibels of operating noise, the model is already very quiet compared to others. The projector was launched in 2010 and is no longer sold by the manufacturer.
Display Type	1 x DLP Chip HDTV 16/9 Ti Digital Light Processing Chip
Projector: Ansi-Lumen	1800
Projector: Contrast	4000:1 full on/off
Projector: Black Level Offset	0,4500 min. Lumen
Screen	800 Lux (bei 200 cm Screen) 4000:1 full on/off 0,2 min. Lumen
Resolution	HDTV 1280 x 720 921.600 Pixel
Video Modes	PAL, SECAM, NTSC, HDTV 720p, 1080i, 1080p EDTV 480p, 576p
Disc Recognition	DVD | HD Blu-ray (komprimiert) | ~~3D Blu-ray~~ | ~~4K UHD Blu-ray~~
3D Compatibility	Frame Sequential (3D Ready)
Application	Homeciname | Small screen width, rooms with very little ambient light below 100 lumens. -
Light Source	Articel Nr.: BL-FU185A / SP.8EH01GC01
Light Life	3000 h.
Operating Costs	-
Focus	Manual
Zoom	Manual 1,1
Objective	-
Throw Ratio	1,553-1,702:1
Audio	-
Connections	HDMI in D-sub 15 pin in S-Video in Cinch Video in RS232C Mini Jack Audio in

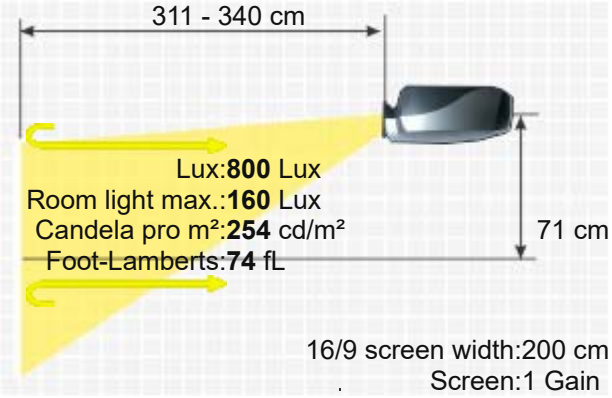



Ceiling Mounting	Yes
Power	-
Size WxHxD	286 x 97 x 192 mm (11,3"x3,8"x7,6") 5,33 L/dm³
Operating Noise	29dB
Weight	2,30 kg / 4,41 lbs.
Keystone	-
Illumination	-
Frequenz	-
Foot-Lamberts	74 fL / max. 431 cm screen width 254 cd/m²

Features

- Full HD 1080P compatible
- Blackboard Modus
- Kensington Slot
- Gamma correction
- Digital image shift
- BrilliantColor™
- Overscan adjustable

Optional

Osram bulb only	NLMPe11203
Lamp ruby	Ruby-LMPe11203
Lamp original	BL-FU185A / SP.8EH01GC01
Compatible lamp	LMP-K19112
Universal Remote original	Fernb-uni-V3
Remote control original	BR-3053B
Ceiling Mount 100-120	Halterung100

Order here: https://www.hcinema.de/lampen/shop-en.php?id=n9003210

Status

2010 Discontinued (EOL) // Last update of the data: 2024-05-16

Data

Created: 2023-10-11 11:41:41

More Details

HCinema

https://www.projector-database.com/pro/optomadh67-en.html

Due to our ongoing commitment to continuously improve the quality of our projector database, this brochure is also subject to change without notice. HCinema is not responsible for any errors or omissions contained in product descriptions.