Optoma DW339



OPTOMA DW339

Brief Introduction Beta 2.5	The standard portable DW339 3D BrilliantColor DLP has 2600 Ansi lumens, a contrast of 5000:1 and a WXGA 1280 x 800 resolution. The manufacturer specifies a lamp life of 4500 hours, which is over 6.2 years with a daily viewing time of 2 hours. The projector can illuminate a picture width of up to 518 cm with its 2600 Ansi lumens. In room lighting, however, the image width should ideally be less than 345 cm. The projector can also display 1080P without any problems. This model is no longer offered by Optoma.
Display Type	1 x 0,65" DLP Chip WXGA 16/10 Ti Digital Light Processing Chip
Ansi-Lumen	Projector: 2600 / Screen: 1040 Lux (bei 200 cm Screen)
Contrast	Projector: 5000:1 full on/off / Screen: 5000:1 full on/off
Black Level	Projector: 0,5200 min. Lumen / Screen: 0,208 min. Lumen
Offset	
Resolution	WXGA 1280 x 800 1.024.000 Pixel UXGA 1600 x 1200 compressed
Video Modes	Pal, SECAM, NTSC, HDTV 720p, 1080i, 1080p EDTV 480p, 576p
3D Compatibility	Frame Sequential (3D Ready)
Application	Standard-Portabel | External training and company presentations, as well as product presentations. Medium screen width or rooms with little light, max. 100 lumens.
Light Source	190W Lamp Articel Nr.: BL-FU190A
Light Life	4500 h. 6500 h. in Eco Mode
Operating Costs	9,52% / 0,04 €
Focus	Manual
Zoom	Manual 1,1
Objective	F=2,5-2,67 f=21,8-23,98 mm
Throw Ratio	1,55-1,70:1
Audio	2W Mono
Connections	HDMI 1.3 in 2 x D-sub 15 pin in 1 x out S-Video in Cinch Video in Mini Jack Audio in und out RS232C USB Typ B

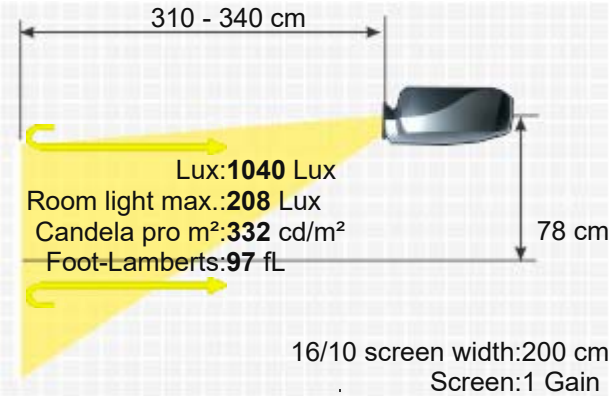



Ceiling Mounting	Yes
Power	263 / 200W in Eco Mode
Size WxHxD	287 x 88,9 x 236,20 mm (11,3"x3,5"x9,3") 5,96 L/dm³
Operating Noise	34 / 32 dB in Eco Mode



Weight	2,27 kg / 5 lbs.
Keystone	Vert.: +/-40°
Illumination	85%
Frequenz	H-sync: 15,3-91,1 kHz V-sync: 24-85 Hz
Foot-Lamberts	97 fL / max. 518 cm screen width 332 cd/m²
Features	■ Full HD 1080P compatible ■ Freeze ■ Eco Mode ■ Kensington Slot ■ BrilliantColor™ ■ Remote control with mouse control

Optional	
Remote control original	BR-5041L, BR-5042L
Lamp original	BL-FU190A

Order here: https://www.hcinema.de/lampen/shop-en.php?id=fro21221

Status: 2012 Discontinued (EOL) // Last update of the data: 2023-08-04

Data









More Details

https://www.projector-database.com/pro/optomadw339-en.html

Due to our ongoing commitment to continuously improve the quality of our projector database, this brochure is also subject to change without notice. HCinema is not responsible for any errors or omissions contained in product descriptions.