Optoma DW416



OPTOMA DW416

Brief Introduction Beta 2.5	A brief introduction to the DW416: The Optoma standard portable 3D DLP projector offers 4500 Ansi lumens, a contrast of 20000:1 and a WXGA 1280 x 800 resolution. The integrated lens shift gives freedom when positioning the projector. 4500 Ansi lumens ensure that a picture width of 682 cm is also possible. The projector can create rooms with residual light with a smaller image width, we recommend a maximum of 455 cm. The HDMI MHL (Mobile High-Definition Link) port allows 1080p / 60 Hz image mirroring (screen mirroring) to be transmitted from a smartphone while it is being charged at the same time via the connection. The projector can also play 1080P and 3D without any problems. This model is no longer offered by Optoma.
Display Type	DLP Chip WXGA 16/10 Ti Digital Light Processing Chip
Ansi-Lumen (Projector)	4500
Ansi-Lumen (Screen)	1800 Lux (bei 200 cm Screen)
Contrast (Projector)	20000:1
Contrast (Screen)	20000:1
Black Level (Projector)	0,2250 min. Lumen
Black Level (Screen)	0,09 min. Lumen
Lens shift	Vert.: +62% --46%
Resolution	WXGA 1280 x 800 1.024.000 Pixel
Video Modes	Pal, SECAM, NTSC, HDTV 720p, 1080i, 1080p, 3D, EDTV 480p, 576p
3D Compatibility	Frame-Packing (Full HD 3D) | Side-by-Side | Top-and-Bottom Frame Sequential (3D Ready)
Application	Standard-Portabel | External training and company presentations, as well as product presentations. Wide screen width or rooms with plenty of light (over 200 lumens).
Light Source	260W Lamp Articel Nr.: SP.72Y01GC01 / BL-FU260C
Light Life	3500 h. /7000 h. in Eco Mode
Operating Costs	16,67% / 0,07 €
Focus	Manual
Zoom	Manual 1,6
Objective	f=20,91-32,62 mm
Throw Ratio	1,39-1,9:1
Audio	10W Mono
Connections	2 x HDMI in (1xMHL) D-sub 15pin in und out Cinch Video in Mini Jack Audio 2x in und out USB RS232C Din 9 pin in

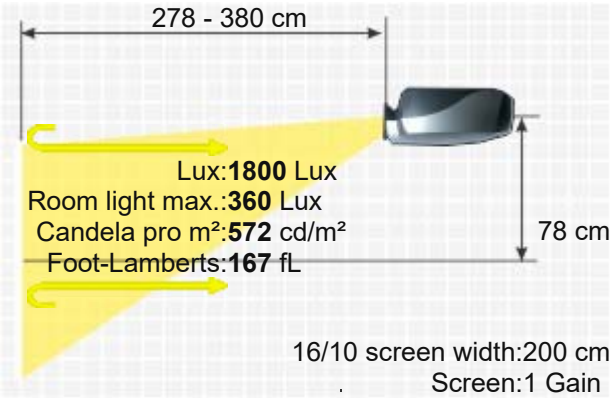

RJ45 in



Ceiling Mounting	Yes
Power	309W
Size WxHxD	315 x 114 x 224 mm (12,4"x4,5"x8,8") 8,04 L/dm³
Operating Noise	32dB



Weight	2,99 kg / 4,41 lbs.
Keystone	Vert.: +/-40°
Illumination	-
Frequenz	H-sync: 15-91 kHz V-sync: 24-120 Hz
Foot-Lamberts	167 fL / max. 682 cm screen width 572 cd/m²

Features

- Real Full HD 3D
- Full HD 1080P compatible
- Lens shift Funktion
- Eco Mode
- Kensington Slot
- PJLink™
- Lan network compatible.
- Crestron®-Software compatible.
- Extron
- AMX
- Telnet LAN

Optional

Lamp original	SP.72Y01GC01 / BL-FU260C
Remote control original	BR-5053C/BR-5080C/SP.72702GC01

Order here: https://www.hcinema.de/lampen/shop-en.php?id=9001142

Status

2018 Discontinued (EOL) // Last update of the data: 2023-09-20
Created: 2018-09-12 19:00:25

Data



More Details

https://www.projector-database.com/pro/optomadw416-en.html

Due to our ongoing commitment to continuously improve the quality of our projector database, this brochure is also subject to change without notice. HCinema is not responsible for any errors or omissions contained in product descriptions.