Optoma DX319P



OPTOMA DX319P

Brief Introduction Beta 2.5	A brief introduction to the DX319P: The Optoma standard portable BrilliantColor DLP projector offers 2500 Ansi lumens, a contrast of 3000:1 and an XGA 1024 x 768 resolution. 2500 Ansi lumens ensure that a picture width of 435 cm is also possible. However, if room light is available, the picture should be a maximum of 290 cm wide. Furthermore, the projector can play 1080P without any problems. The projector is very quiet compared to others with an operating noise of 30 decibels. The projector was launched in 2010 and is no longer sold by the manufacturer.
Display Type	1 x 0,55" DLP Chip XGA 4/3 Ti Digital Light Processing Chip
Ansi-Lumen (Projector)	2500 / 1500 im Eco Mode
Ansi-Lumen (Screen)	833 Lux (bei 200 cm Screen)
Contrast (Projector)	3000:1 full on/off
Contrast (Screen)	3000:1 full on/off
Black Level (Projector)	0,8333 min. Lumen
Black Level (Screen)	0,278 min. Lumen
Offset	-
Resolution	XGA 1024 x 768 786.432 Pixel UXGA 1600 x 1200 compressed
Video Modes	PAL, SECAM, NTSC, HDTV 720p, 1080i, 1080p EDTV 480p, 576p
Application	Standard-Portabel | External training and company presentations, as well as product presentations. Medium screen width or rooms with little light, max. 100 lumens.
Light Source	185W Lamp Articel Nr.: BL-FU185A / SP.8EH01GC01
Light Life	3000 h. 4000 h. in eco Mode
Operating Costs	-
Focus	Manual
Zoom	Manual 1,1
Objective	F=2,41-2,55 f=21,8-24 mm
Throw Ratio	1,95-2,15:1
Audio	1 x 2W
Connections	2 x D-sub 15 pin in und out S-Video in Cinch Video in RS232C

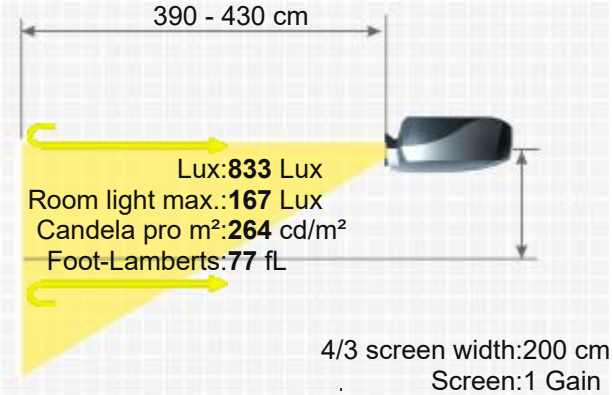



Ceiling Mounting	Yes
Power	233W
Size WxHxD	286 x 84 x 192 mm (11,3"x3,3"x7,6") 4,61 L/dm³
Operating Noise	30 / 28 dB in Eco Mode

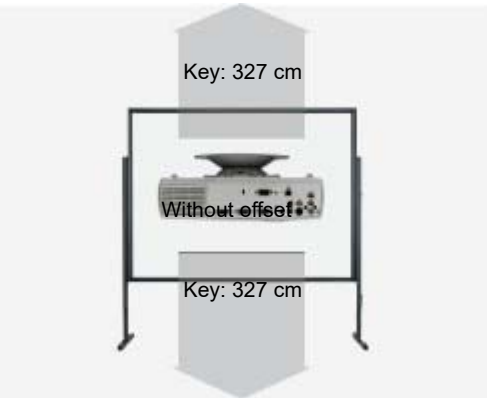

Weight	2,30 kg / 5,07 lbs.
Keystone	Vert.: +/-40°
Illumination	-
Frequenz	H-sync: 15,3-91,1 kHz V-sync: 24-85 Hz
Foot-Lamberts	77 fL / max. 435 cm screen width 264 cd/m²

Features

- Full HD 1080P compatible
- Freeze
- Blackboard Modus
- Eco Mode
- Kensington Slot
- sRGB
- Digital image shift
- Password protection
- BrilliantColor™
- Overscan adjustable

Optional

Osram bulb only	NLMPe11203
Lamp ruby	Ruby-LMPe11203
Lamp original	BL-FU185A / SP.8EH01GC01
Compatible lamp	LMP-K19112
Universal Remote original	Fernb-uni-V3
Ceiling Mount 100-120	Halterung100

Status

Order here: https://www.hcinema.de/lampen/shop-en.php?id=ne9766
2010 Discontinued (EOL) // Last update of the data: 2023-08-04

Data



More Details

https://www.projector-database.com/pro/optomadx319p-en.html

Due to our ongoing commitment to continuously improve the quality of our projector database, this brochure is also subject to change without notice. HCinema is not responsible for any errors or omissions contained in product descriptions.