Optoma EW775



OPTOMA EW775

Brief Introduction Beta 2.5	The Optoma model EW775 is a DLP projector with WXGA 1280 x 800 resolution and a contrast of 2000:1. The projector also offers a lens shift function, which makes setting up the image childs play. The projector can illuminate images up to 682 cm wide thanks to its 4500 Ansi lumens. The projector can create rooms with residual light with a smaller image width, we recommend a maximum of 455 cm. Playing 1080P is also no problem for the projector. On the market since 2010, the model is no longer offered by the manufacturer Optoma, but is still very popular in our projector database.
Display Type	1 x 0,65" DC2 DLP Chip WXGA 16/10 Ti Digital Light Processing Chip
Ansi-Lumen	Projector: 4500 / Screen: 1800 Lux (bei 200 cm Screen)
Contrast	Projector: 2000:1 full on/off / Screen: 2000:1 full on/off
Black Level	Projector: 2,2500 min. Lumen / Screen: 0,901 min. Lumen
Lens shift	Vert.: +60% -20% Hori.: +/-10%
Resolution	WXGA 1280 x 800 1.024.000 Pixel UXGA 1600 x 1200 compressed
Video Modes	PAL, SECAM, NTSC, HDTV 720p, 1080i, 1080p EDTV 480p, 576p
3D Compatibility	Frame Sequential (3D Ready)
Application	Stationary | Permanent installation in the training room and meeting room as well as the conference room. Wide screen width or rooms with plenty of light (over 200 lumens).
Light Source	330W P-VIP Lamp Articel Nr.: 5811116283-SOT
Light Life	2000 h. 3000 h. in Eco Mode
Operating Costs	5,79% / 0,19 €
Focus	Manual
Zoom	Manual 1,25
Objective	F=2,46-2,56 f=22,8-28,5 mm
Throw Ratio	1,62-2,03:1
Audio	2 x 3W
Connections	HDMI DVI-D 2 x D-sub 15 pin in 1 x out 5 x BNC RGBHV in S-Video in Cinch Video in Mini Jack Audio in und out

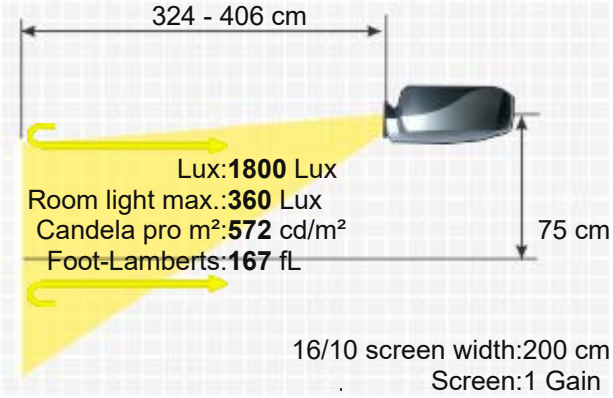

	RS232C RJ45 in 2 x 12V Trigger out
Ceiling Mounting	Yes
Power	430W
Size WxHxD	416 x 143 x 324 mm (16,4"x5,6"x12,8") 19,27 L/dm³
Operating Noise	31dB

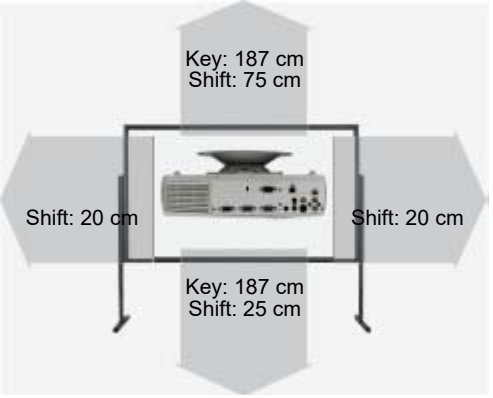

Weight	8,20 kg / 18,08 lbs.
Keystone	Vert.: +/-30°
Illumination	85%
Frequenz	H-sync: 15-91 kHz V-sync: 43-85 Hz
Foot-Lamberts	167 fL / max. 682 cm screen width 572 cd/m²

Features

- Full HD 1080P compatible
- Lens shift Funktion
- Freeze
- Blackboard Modus
- Eco Mode
- Kensington Slot
- sRGB
- Digital image shift
- Password protection
- BrilliantColor™
- Remote control with laser pointer und mouse control
- Control via web browser
- Lan network compatible.
- Overscan adjustable
- Crestron®-Software compatible.

Optional

Bulb only Osram	NLMP20003
Lamp ruby	Ruby-LMP20003
Lamp original	BL-FP330B / 5811116283-SOT / DE.5811116911-SOT
Compatible lamp	LMP-K19835
Universal Remote original	Fernb-uni-V3
Remote control original	DE.5041820300
Ceiling Mount 100-120	Halterung100

Order here: https://www.hcinema.de/lampen/shop-en.php?id=n20003

Optional Lenses

Name	Ratio	Distance	Shift V	Shift H	Zoom
Zoom Optional Lenses					
Long Throw Lens	2.03-3.05:1	4.1-6.1 m	60-20%	+/-10%	Manual
2.03~ 3.05 :1	2.03-3.05:1	4.1-6.1 m	55-5%	+/-5%	Manual
Fix Optional Lenses					
Short Throw Lens	0.8:1	1.6 m	0.0% Fix		No Zoom
0.81 :1	0.8:1	1.6 m	0.0% Fix		No Zoom

Status: 2010 Discontinued (EOL) // Last update of the data: 2023-08-04

Data



More Details

HCinema

https://www.projector-database.com/pro/optomaew775-en.html

Due to our ongoing commitment to continuously improve the quality of our projector database, this brochure is also subject to change without notice. HCinema is not responsible for any errors or omissions contained in product descriptions.