Optoma H105



Brief Introduction Beta 2.5	The standard portable H105 3D BrilliantColor DLP projector from Optoma has 3200 Ansi lumens, a contrast of 20000:1 and a WXGA 1280 x 800 resolution. The manufacturer specifies a lamp life of 6500 hours, which is over 8.9 years if enjoyed for two hours a day. A picture width of up to 575 cm is possible. However, the picture should be smaller in room light. We recommend max. 383 cm. The model is also Full HD 1080P and 3D compatible. The projector is very quiet compared to others with 28 decibels of operating noise. This model is no longer offered by Optoma.
Display Type	1 x 0,65" DC3 DLP Chip WXGA 16/10 Ti Digital Light Processing Chip
Projector: Ansi-Lumen	3200
Projector: Contrast	20000:1 full on/off
Projector: Black Level	0,1600 min. Lumen
Screen	1280 Lux (bei 200 cm Screen) 20000:1 full on/off 0,064 min. Lumen
Offset	
Resolution	WXGA 1280 x 800 1.024.000 Pixel UXGA 1600 x 1200 compressed
Video Modes	Pal, SECAM, NTSC, HDTV 720p, 1080i, 1080p, 3D, EDTV 480p, 576p
3D Compatibility	Frame-Packing (Full HD 3D) | Side-by-Side | Top-and-Bottom Frame Sequential (3D Ready)
Application	Standard-Portabel | External training and company presentations, as well as product presentations. Medium screen width or rooms with a little more ambient light, max. 200 lumens.
Light Source	-
Light Life	6500 h.
Operating Costs	-
Focus	Manual
Zoom	Manual 1,1
Objective	F=2,5-2,67 f=21,8-23,98 mm
Throw Ratio	1,55-1,7:1
Audio	1 x 2W
Connections	HDMI 1.4 in D-sub 15 pin in S-Video in Cinch Video in Mini Jack Audio in und out RS232C
Ceiling Mounting	Yes

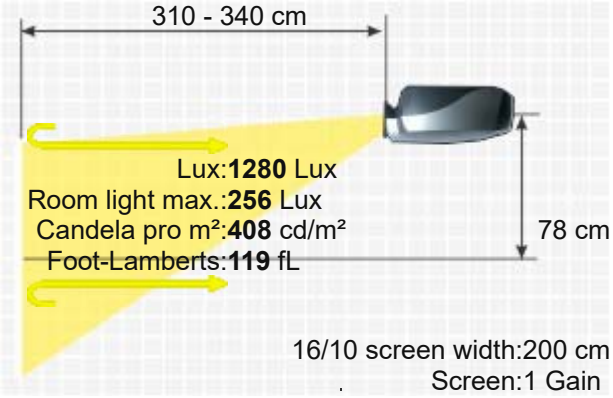

OPTOMA H105

Power	233 / 207W in Eco Mode
Size WxHxD	286 x 84 x 192 mm (11,3"x3,3"x7,6") 4,61 L/dm³
Operating Noise	28dB
Weight	2,20 kg / 4,85 lbs.
Keystone	Vert.: +/-40°
Illumination	80%
Frequenz	H-sync: 15,3-91,1 kHz V-sync: 24-85 Hz
Foot-Lamberts	119 fL / max. 575 cm screen width 408 cd/m²
Features	■ Real Full HD 3D ■ Full HD 1080P compatible ■ Blackboard Modus ■ Eco Mode ■ Kensington Slot ■ sRGB ■ Password protection ■ BrilliantColor™
Status	2013 Discontinued (EOL) // Last update of the data: 2023-08-04
Data	Created: 2013-11-26 11:51:42
More Details	https://www.projector-database.com/pro/optomah105-en.html



Due to our ongoing commitment to continuously improve the quality of our projector database, this brochure is also subject to change without notice. HCinema is not responsible for any errors or omissions contained in product descriptions.