Optoma HD30UST



OPTOMA HD30UST

Brief Introduction Beta 2.5	The Optoma HD30UST 3D DLP projector has 3600 Ansi lumens, a contrast of 20000:1 and an HDTV 1920 x 1080 resolution. The manufacturer Optoma specifies a lamp life of 10000 hours, which converts to over 13.7 years at 2 hours per day. The horizontal and vertical keystone correction provides leeway when setting up. With a projection ratio of just 0.25:1, this projector never gets in the way. For a 2m wide image, the projector only needs to be 50 cm away from the screen. The projector has optional Ezcast, screen mirroring support, which enables direct playback of videos in high resolution and surround sound from smartphones, tablets and PCs with Android, Windows or iOS via Wi-Fi. It is also Full HD 1080P and 3D compatible. The model was built by Optoma in 2018 and is no longer current, but is still a popular projector in our database.
Display Type	1 x DLP Chip HDTV 16/9 Ti Digital Light Processing Chip
Ansi-Lumen	Projector: 3600 / Screen: 1600 Lux (bei 200 cm Screen)
Contrast	Projector: 20000:1 full on/off / Screen: 20000:1 full on/off
Black Level	Projector: 0,1800 min. Lumen / Screen: 0,08 min. Lumen
Offset	
Resolution	HDTV 1920 x 1080 2.073.600 Pixel
Video Modes	Pal, SECAM, NTSC, HDTV 720p, 1080i, 1080p, 3D, EDTV 480p, 576p
Disc Recognition	DVD | HD Blu-ray | 3D Blu-ray | ~~4K UHD Blu-ray~~
3D Compatibility	Frame-Packing (Full HD 3D) | Side-by-Side | Top-and-Bottom Frame Sequential (3D Ready)
Application	Short Distance | Medium screen width or rooms with a little more ambient light, max. 200 lumens.
Light Source	240W Lampe Articel Nr.: BL-FU220E / SP.7C601GC01
Light Life	4000 h. / 10000 h. ECO / 15000 ExtremEco
Operating Costs	-
Focus	Manual
Zoom	No Zoom
Objective	-
Throw Ratio	0,25:1
Audio	16W
Connections	HDMI v1.4a in HDMI / MHL D-sub 15pin in und out Cinch Video in

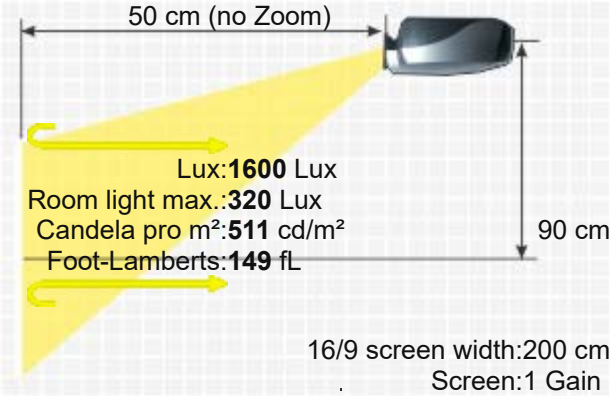

	Cinch Stereo in Mini Jack Audio in und out USB-A (USB Display/USB Reader) USB-A (Wifi) RS232C Din 9 pin in RJ45 in



Ceiling Mounting	Yes
Power	275W
Size WxHxD	343 x 96,5 x 383 mm (13,5"x3,8"x15,1") 12,68 L/dm³
Operating Noise	25 dB in Eco Mode

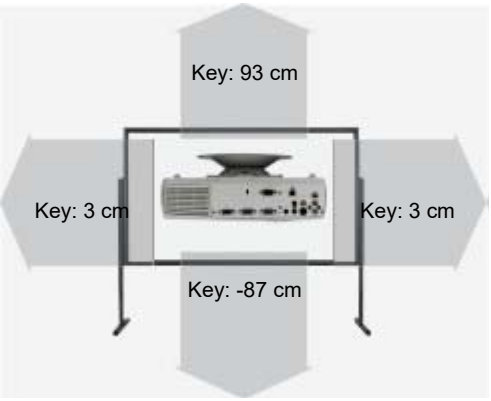

Weight	3,90 kg / 8,6 lbs.
Keystone	Vert.: +/-4° automatisch Hori.: +/-4°
Illumination	-
Frequenz	H-sync: 15,37-91,1 kHz V-sync: 24-85 Hz
Foot-Lamberts	149 fL / max. 610 cm screen width 511 cd/m²
Features	■ Real Full HD 3D ■ Full HD 1080P compatible ■ Direkt Power Off ■ Blackboard Modus ■ Eco Mode ■ Automatic and manual vertical keystone correction ■ 24/7 continuous operation capable ■ PJLink™ ■ Optional Wi-Fi network compatible. ■ Lan network compatible. ■ Short-throw projector ■ Crestron®-Software compatible. ■ AMX
Status	2018 Discontinued (EOL) // Last update of the data: 2023-10-17
Data	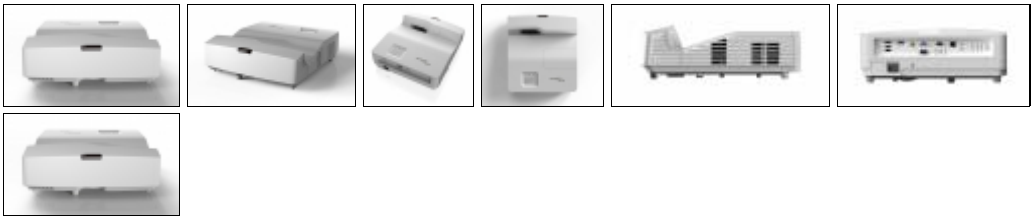
More Details	HCinema https://www.projector-database.com/pro/optomahd30ust-en.html

Due to our ongoing commitment to continuously improve the quality of our projector database, this brochure is also subject to change without notice. HCinema is not responsible for any errors or omissions contained in product descriptions.