Optoma LV130



OPTOMA LV130

Brief Introduction Beta 2.5	The Optoma LV130 LED DLP projector has 300 Ansi lumens, a contrast of 100000:1 and a WVGA 854 x 480 resolution. The manufacturer specifies an LED service life of 30,000 hours, which is over 20.5 years with a daily viewing time of 4 hours. A picture width of up to 176 cm is possible as the projector has 300 Ansi lumens. However, if there is room light, the picture should be a maximum of 117 cm wide. With the HDMI MHL port, the smartphone image can be transmitted to the projector in Full HD at 60 Hz by screen mirroring and the smartphone is charged at the same time. It is also Full HD 1080P compatible. At 26 decibels, the projector is very quiet compared to other projectors. On the market since 2018, the model is no longer offered by the manufacturer Optoma.
Display Type	DLP Chip WVGA 16/9 Ti Digital Light Processing Chip
Ansi-Lumen	Projector: 300 / Screen: 133 Lux (bei 200 cm Screen)
Contrast	Projector: 100000:1 / Screen: 100000:1
Black Level	Projector: 0,0030 min. Lumen / Screen: 0,001 min. Lumen
Offset	-
Resolution	WVGA 854 x 480 409.920 Pixel
Video Modes	Pal, SECAM, NTSC, HDTV 720p, 1080i, 1080p, EDTV 480p, 576p
Application	Game-Portabel | Very portable, small-screen projections. Very narrow picture width and rooms with very little light.
Light Source	LED
Light Life	30000 h.
Operating Costs	0,00 € LED
Focus	-
Zoom	No Zoom
Objective	f=5,02mm
Throw Ratio	1,1:1
Audio	1 x 1,5W
Connections	1 x HDMI 1.4a 3D Support + MHL 1 x Audio 3.5mm 1 x USB-A Power 1A
Ceiling Mounting	Yes
Power	25W
Size WxHxD	108 x 36 x 126 mm (4,3"x1,4"x5") 0,49 L/dm³
Operating Noise	26dB

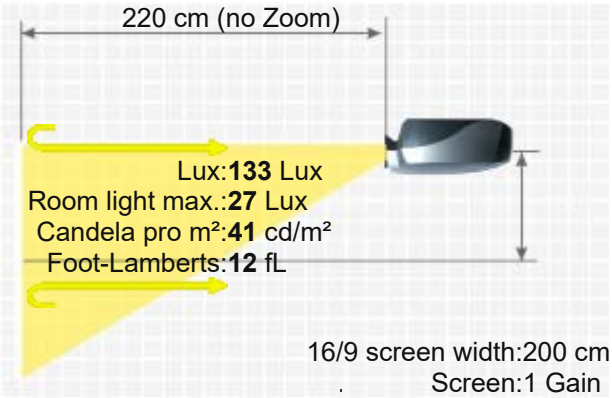

Key: 185 cm



Weight	0,400 kg / 0,88 lbs.
Keystone	Vert.: +/-40°
Illumination	-
Frequenz	H-sync: 15-75 kHz V-sync: 24-60 Hz
Foot-Lamberts	12 fL / max. 176 cm screen width 41 cd/m²
Features	■ Full HD 1080P compatible -

Optional Lenses

Status	2018 Discontinued (EOL) // Last update of the data: 2024-10-02 Created: 2018-09-23 19:31:54
Data	
More Details	HCinema https://www.projector-database.com/pro/optomalv130-en.html

Due to our ongoing commitment to continuously improve the quality of our projector database, this brochure is also subject to change without notice. HCinema is not responsible for any errors or omissions contained in product descriptions.