Optoma ML550



OPTOMA ML550

Brief Introduction Beta 2.5	With the ML550, manufacturer Optoma offers a micro-portable DLP LED projector with WXGA 1280 x 800 resolution and a contrast of 10000:1. The service life of the LEDs is 20000 hours, which is over 13.7 years with a daily viewing time of 4 hours. Including an integrated media player, which can be used to play files directly. 550 Ansi lumens ensure that a picture width of 238 cm is also possible. However, if there is room light, the picture should be a maximum of 159 cm wide. The HDMI MHL (Mobile High-Definition Link) port makes it possible to transmit a 1080p / 60 Hz image mirroring (screen mirroring) from the smartphone while it is being charged at the same time via the connection. The model built in 2013 is no longer offered by Optoma, but is still very popular in our projector database.
Display Type	1 x 0,45" DLP Chip WXGA 16/10 Ti Digital Light Processing Chip
Ansi-Lumen	Projector: 550 / Screen: 220 Lux (bei 200 cm Screen)
Contrast	Projector: 10000:1 full on/off / Screen: 10000:1 full on/off
Black Level Offset	Projector: 0,0550 min. Lumen / Screen: 0,022 min. Lumen
Resolution	WXGA 1280 x 800 1.024.000 Pixel
Video Modes	Pal, SECAM, NTSC, HDTV 720p, 1080i, EDTV 480p, 576p **Media player formats:** Document - Microsoft PowerPoint® (ppt, pptx), Word® (doc, docx), Excel® (xls, xlsx), Adobe (pdf) Video - avi, mov, mp4, wmv, mkv, Photo - Jpeg, bmp Music - mp3, aac, wma
3D Compatibility	Frame Sequential (3D Ready)
Application	Micro-Portabel | Small mobile presentations.. Very narrow picture width and rooms with very little light.
Light Source	LED Articel Nr.: BR-ML55N, 45.8UA01G001
Light Life	20000 h.
Operating Costs	0,00 € LED
Focus	Manual
Zoom	No Zoom
Objective	F=2,0 f=14,95mm
Throw Ratio	1,5:1
Audio	1W Mono
Connections	HDMIMHL USB Typ A

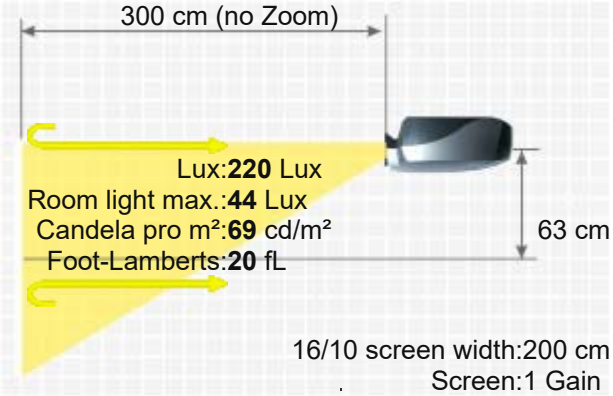



Ceiling Mounting	-
Power	-
Size WxHxD	105 x 39 x 106 mm (4,1"x1,5"x4,2") 0,43 L/dm³
Operating Noise	30 dB in Eco Mode



Weight	0,380 kg / 0,84 lbs.
Keystone	Vert.: +/-40°
Illumination	85%
Frequenz	H-sync: 15,975-91, kHz V-sync: 24-120 Hz
Foot-Lamberts	20 fL / max. 238 cm screen width 69 cd/m²
Features	■ Integrated Mediaplayer ■ Eco Mode ■ Kensington Slot ■ Crestron®-Software compatible.
Optional	Remote control original BR-ML55N, 45.8UA01G001 Order here: https://www.hcinema.de/lampen/shop-en.php?id=fro9002260
Status	2013 Discontinued (EOL) // Last update of the data: 2024-10-02 Created: 2013-06-07 11:54:37
Data	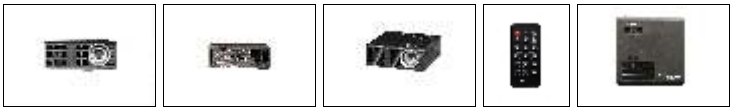
More Details	HCinema https://www.projector-database.com/pro/optomaml550-en.html

Due to our ongoing commitment to continuously improve the quality of our projector database, this brochure is also subject to change without notice. HCinema is not responsible for any errors or omissions contained in product descriptions.