Optoma W319ST



Brief Introduction Beta 2.5	The short-throw W319ST 3D DLP has 4000 Ansi lumens, a contrast of 25000:1 and a WXGA 1280 x 800 resolution. The manufacturer specifies a lamp life of 10000 hours, which is over 13.7 years with a daily viewing time of 2 hours. Thanks to the short-throw projection ratio of just 0.52:1, the projector does not stand still in the room. For a 2m wide image, the projector only needs to be 104 cm away from the screen. The model offers a microphone jack plug and 10W speakers, so no additional audio equipment is required for presentations or training courses. The model is also Full HD 1080P and 3D compatible. The projector is very quiet compared to other projectors with 28 decibels of operating noise. This model is no longer offered by Optoma.
Display Type	DLP Chip WXGA 16/10 Ti Digital Light Processing Chip
Projector: Ansi-Lumen	4000
Projector: Contrast	25000:1
Projector: Black Level Offset	0,1600 min. Lumen
Screen	1600 Lux (bei 200 cm Screen) 25000:1 0,064 min. Lumen
Resolution	WXGA 1280 x 800 1.024.000 Pixel
Video Modes	Pal, SECAM, NTSC, HDTV 720p, 1080i, 1080p, 3D, EDTV 480p, 576p
Disc Recognition	DVD | HD Blu-ray (komprimiert) | 3D Blu-ray (komprimiert) | ~~4K UHD Blu-ray~~
3D Compatibility	Frame-Packing (Full HD 3D) | Side-by-Side | Top-and-Bottom Frame Sequential (3D Ready)
Application	Short Distance | Wide screen width or rooms with plenty of light (over 200 lumens).
Light Source	203W Lamp Articel Nr.: SP.7DQR1GR01
Light Life	6000 / 10000 h. in Eco Mode
Operating Costs	-
Focus	Manual
Zoom	No Zoom
Objective	f=7,51mm
Throw Ratio	0,52:1
Audio	1 x 10W
Connections	2x HDMI in D-sub 15pin 2x in und out Cinch Video in Mini Jack Audio in und out Microphone USB RS232C Din 9 pin in

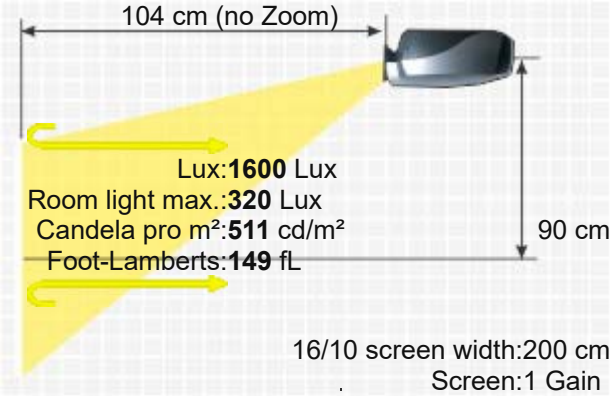

OPTOMA W319ST

RJ45



Ceiling Mounting	Yes
Power	225W / 187W in Eco Mode
Size WxHxD	316 x 108 x 244 mm (12,4"x4,3"x9,6") 8,33 L/dm³
Operating Noise	28 / 26 dB in Eco Mode



Weight	3,00 kg / 6,61 lbs.
Keystone	Vert.: +/-40°
Illumination	-
Frequenz	H-sync: 15,31-91,1 kHz V-sync: 50-120 Hz
Foot-Lamberts	149 fL / max. 643 cm screen width 511 cd/m²
Features	■ Real Full HD 3D ■ Full HD 1080P compatible ■ Eco Mode ■ Kensington Slot ■ Optional Wi-Fi network compatible. ■ Lan network compatible. ■ Short-throw projector
Status	2021 Discontinued (EOL) // Last update of the data: 2024-05-16 Created: 2021-03-05 11:04:25
Data	

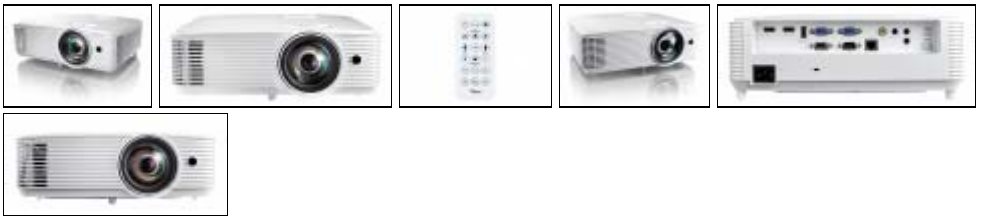

More Details

HCinema

https://www.projector-database.com/pro/optomaw319st-en.html

Due to our ongoing commitment to continuously improve the quality of our projector database, this brochure is also subject to change without notice. HCinema is not responsible for any errors or omissions contained in product descriptions.