Optoma X307UST





Brief Introduction Beta 2.5	The Optoma X307UST short-throw 3D DLP projector has 3100 Ansi lumens, a contrast of 15000:1 and an XGA 1024 x 768 resolution. Thanks to the short-throw projection ratio of just 0.43:1, the projector is also not distracting in the room. For a 2m wide image, the projector only needs to be 86 cm away from the screen. The model offers a microphone jack plug and 10W speakers, so no additional audio equipment is required for presentations or training courses. The model is also Full HD 1080P and 3D compatible. The projector was launched in 2013 and is no longer sold by the manufacturer, but is still a very popular projector.
Display Type	1 x 0,55" DC3 DLP Chip XGA 4/3 Ti Digital Light Processing Chip
Ansi-Lumen	Projector: 3100 / Screen: 1033 Lux (bei 200 cm Screen)
Contrast	Projector: 15000:1 full on/off / Screen: 15000:1 full on/off
Black Level	Projector: 0,2067 min. Lumen / Screen: 0,069 min. Lumen
Offset	
Resolution	XGA 1024 x 768 786.432 Pixel UXGA 1600 x 1200 compressed
Video Modes	Pal, SECAM, NTSC, HDTV 720p, 1080i, 1080p, 3D, EDTV 480p, 576p
Disc Recognition	DVD | HD Blu-ray (komprimiert) | 3D Blu-ray (komprimiert) | ~~4K UHD Blu-ray~~
3D Compatibility	Frame-Packing (Full HD 3D) | Side-by-Side | Top-and-Bottom Frame Sequential (3D Ready)
Application	Short Distance | Medium screen width or rooms with a little more ambient light, max. 200 lumens.
Light Source	- Articel Nr.: SP.8UP01GC01
Light Life	3000 h. 4000 h. in eco Mode
Operating Costs	-
Focus	Manual
Zoom	No Zoom
Objective	F=2,6 f=7,017mm
Throw Ratio	0,43:1
Audio	10W
Connections	HDMI 1.4a in 2 x D-sun 15 pin in 1 x out S-Video in Cinch Video in Cinch Stereo in Mini Jack Audio in und out

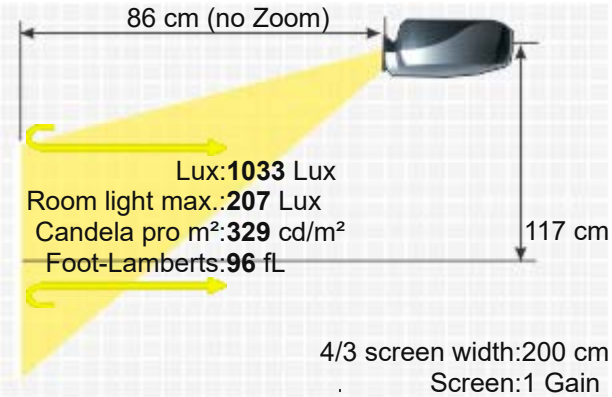

RJ45 in
RS232C Din 9 pin in
12V Trigger out
Mikrofon in



Ceiling Mounting	Yes
Power	345 / 285W in Eco Mode
Size WxHxD	357 x 231 x 367 mm (14,1"x9,1"x14,4") 30,27 L/dm³
Operating Noise	30 dB in Eco Mode

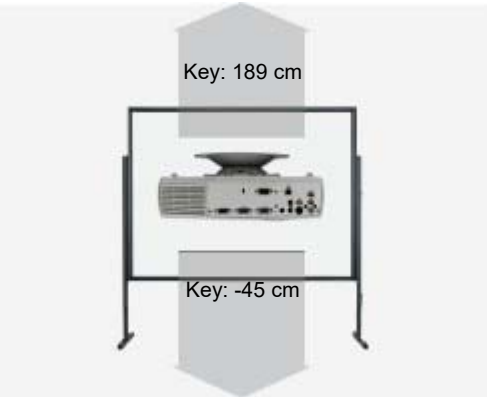

Weight	7,50 kg / 16,53 lbs.
Keystone	Vert.: +/-40°
Illumination	85%
Frequenz	H-sync: 15,3-91,1 kHz V-sync: 24-85 Hz
Foot-Lamberts	96 fL / max. 485 cm screen width 329 cd/m²

Features

- Real Full HD 3D
- Full HD 1080P compatible
- Eco Mode
- Kensington Slot
- Password protection
- Remote control with laser pointer
- Lan network compatible.
- Short-throw projector
- Crestron®-Software compatible.

Optional

Lamp original	SP.8UP01GC02 / SP.8UP01GC01 / BL-FP280I
Remote control original	BR-1006N

Order here: https://www.hcinema.de/lampen/shop-en.php?id=21910

Status

2013 Discontinued (EOL) // Last update of the data: 2023-08-04
Created: 2013-05-22 17:16:25

Data



More Details

https://www.projector-database.com/pro/optomax307ust-en.html

Due to our ongoing commitment to continuously improve the quality of our projector database, this brochure is also subject to change without notice. HCinema is not responsible for any errors or omissions contained in product descriptions.