Optoma X320USTi





Brief Introduction Beta 2.5	The Optoma model X320USTi is a DLP projector with WXGA 1280 x 800 resolution and a contrast of 20000:1. As the X320USTi is equipped with a microphone jack plug and 16W speakers, no additional audio system is required for presentations or training courses. 643 cm picture width, the projector will be able to illuminate well. Rooms with residual light can be created by the projector with a smaller image width, we would recommend a maximum of 429 cm here. The projector offers an interactive whiteboard function for interactive training courses and presentations. Playing 1080P and 3D is also no problem for the projector. The model was built by Optoma in 2015 and is no longer current, but is still very popular in our projector database.
Display Type	1 x 0,55" DC3 DLP Chip WXGA 16/10 Ti Digital Light Processing Chip
Ansi-Lumen	Projector: 4000 / Screen: 1600 Lux (bei 200 cm Screen)
Contrast	20000:1 full on/off / 20000:1 full on/off
Black Level Offset	0,2000 min. Lumen / 0,08 min. Lumen
Resolution	WXGA 1280 x 800 1.024.000 Pixel UXGA 1600 x 1200 compressed
Video Modes	Pal, SECAM, NTSC, HDTV 720p, 1080i, 1080p, 3D, EDTV 480p, 576p
3D Compatibility	Frame-Packing (Full HD 3D) | Side-by-Side | Top-and-Bottom Frame Sequential (3D Ready)
Application	Whiteboard | Training and company presentations, as well as product presentations. Wide screen width or rooms with plenty of light (over 200 lumens).
Light Source	260W Lamp Articel Nr.: SP.72701GC01
Light Life	3000 h. 6500 h. in Eco Mode
Operating Costs	-
Focus	Manual
Zoom	No Zoom
Objective	F=2,4 f=3,72mm
Throw Ratio	0,33:1
Audio	16W
Connections	HDMI 1.4a in 2 x D-sub 15pin in 1 x out Cinch Video in S-Video in Mini Jack Audio in und out

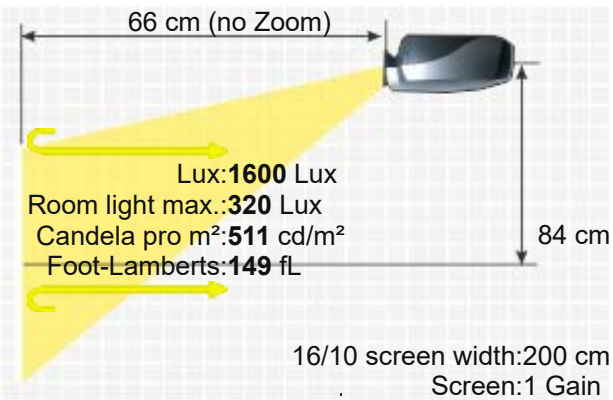

OPTOMA X320USTI

USB Typ A in
RS232C Din 9 pin in
RJ45 in
Mikrofon in
12V Trigger out



Ceiling Mounting	Yes
Power	310 / 260W in Eco Mode
Size WxHxD	385 x 120 x 310 mm (15,2"x4,7"x12,2") 14,32 L/dm³
Operating Noise	28 dB in Eco Mode

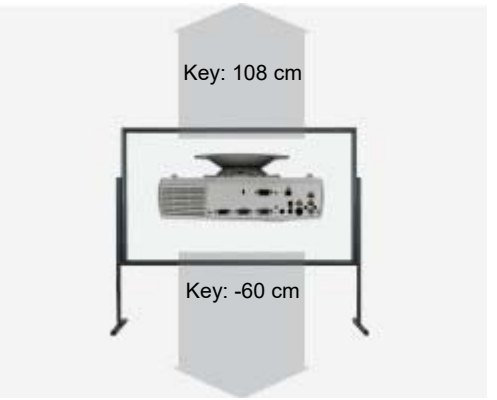

Weight	4,85 kg / 10,69 lbs.
Keystone	Vert.: +/-20°
Illumination	85%
Frequenz	H-sync: 15,37-91,1 kHz V-sync: 24-85 Hz
Foot-Lamberts	149 fL / max. 643 cm screen width 511 cd/m²

Features

- Real Full HD 3D
- Full HD 1080P compatible
- Eco Mode
- Kensington Slot
- PJLink™
- Lan network compatible.
- Short-throw projector
- Crestron®-Software compatible.
- Whiteboard function TouchBeam Finger Touch interactive.

Optional

Lamp original	SP.72701GC01 / BL-FU260B
Remote control original	BR-5053C/BR-5080C/SP.72702GC01

Order here: https://www.hcinema.de/lampen/shop-en.php?id=23426

Status

2015 Discontinued (EOL) // Last update of the data: 2023-08-04
Created: 2015-06-23 16:05:41

Data






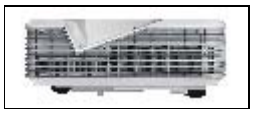



More Details

https://www.projector-database.com/pro/optomax320usti-en.html

Due to our ongoing commitment to continuously improve the quality of our projector database, this brochure is also subject to change without notice. HCinema is not responsible for any errors or omissions contained in product descriptions.