Panasonic PT F200NTE/U/A



Brief Introduction Beta 2.5	With the PT F200NTE/U/A, manufacturer Panasonic offers an LCD projector with XGA 1024 x 768 resolution and a contrast of 400:1. The built-in ambient light sensor detects the ambient light in the room and automatically optimizes the image. Including a lens shift and keystone correction function, which provides freedom during installation. Thanks to the brightness of 3500 Ansi lumens, a picture width of 515 cm is possible. The projector can also handle slightly brighter rooms with a smaller picture width (we recommend max. 343 cm). The projector was launched in 2008 and is no longer sold by the manufacturer.
Display Type	3 x 0,7" LCD TFT Panel XGA 4/3 Liquid Crystal Display
Ansi-Lumen	Projector: 3500 / Screen: 1167 Lux (bei 200 cm Screen)
Contrast	Projector: 400:1 full on/off / Screen: 400:1 full on/off
Black Level	Projector: 8,7500 min. Lumen / Screen: 2,939 min. Lumen
Lens shift	Vert.: +/-50% Hori.: +/-32%
Resolution	XGA 1024 x 768 786.432 Pixel UXGA 1600 x 1200 compressed
Video Modes	PAL, SECAM, NTSC, HDTV 720p, 1080i, EDTV 480p, 576p
Application	Standard-Portabel | External training and company presentations, as well as product presentations. Medium screen width or rooms with a little more ambient light, max. 200 lumens.
Light Source	250W UHM Lamp Articel Nr.: ET-LAF100
Light Life	3000 h.
Operating Costs	21,43% / 0,09 €
Focus	Manual
Zoom	Manual 1,2
Objective	F=1,7-2,6 f=21,6-43,0 mm
Throw Ratio	1,39-2,77:1
Audio	1 x 3W Mono
Connections	D-sun 15pin in und out YUV in S-Video in Cinch Video in Cinch Stereo in Mini Jack Audio in und out

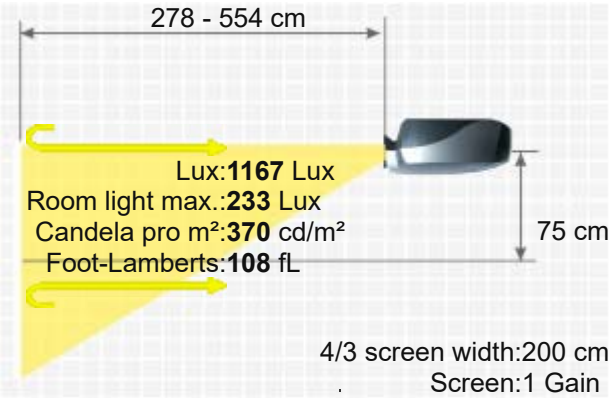

PANASONIC PT F200NTE/U/A

RJ45
RS232C

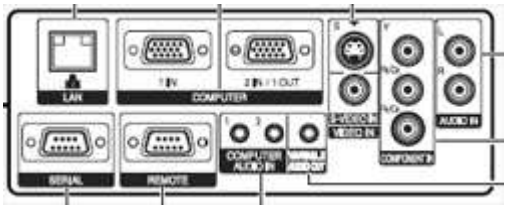

Ceiling Mounting	Yes
Power	330W / 4,5W standby
Size WxHxD	432 x 124,5 x 319 mm (17"x4,9"x12,6") 17,09 L/dm³
Operating Noise	-

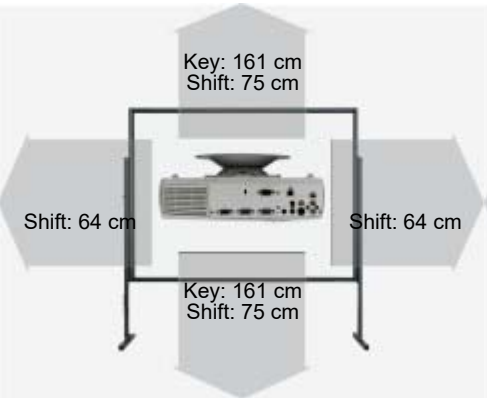

Weight	6,20 kg / 13,23 lbs.
Keystone	Vert.: +/-30°
Illumination	-
Frequenz	H-sync: 15-91 kHz V-sync: 50-85 Hz Range max.: 108 MHz
Foot-Lamberts	108 fL / max. 515 cm screen width 370 cd/m²

Features

- Direkt Power Off
- Lens shift Funktion
- Freeze
- Blackboard Modus
- User logo
- Kensington Slot
- sRGB
- Gamma correction
- Password protection
- Remote control with laser pointer
- PJLink™
- Control via web browser
- Wi-Fi network compatible.
- Lan network compatible.
- Ambient Light Sensor.

Optional

Lamp ruby	Ruby-LMP20236
Lamp original	ET-LAF100 / ET-LAP770 / ET-LAF100A
Compatible lamp	LMP-K16550
Universal Remote original	Fernb-uni-V3
Remote control original	N2QAYB000152
Air filter original	ET-RFF100
Ceiling Mount 100-120	Halterung100

Order here: https://www.hcinema.de/lampen/shop-en.php?id=d18265

Status: 2008 Discontinued (EOL) // Last update of the data: 2023-08-12

Data



More Details

https://www.projector-database.com/pro/panasonicpf200nt-en.html

Due to our ongoing commitment to continuously improve the quality of our projector database, this brochure is also subject to change without notice. HCinema is not responsible for any errors or omissions contained in product descriptions.