Panasonic

SPEC FILE

Product Number : PT-**DX820W**/**DX820LW**
PT-**DX820B**/**DX820LB**

Product Name : DLP™ Projectors

Specifications

Main unit

Power supply		
Power consumption	120–240 V AC, 50/60 Hz	790 W (810 VA) (0.3 W with STANDBY MODE set to ECO*1, 3 W with STANDBY MODE set to NORMAL) max. 2,696 BTU (without light output: 2,601 BTU)
DLP™ chip	Panel size	17.8 mm (0.7 in) diagonal (4:3 aspect ratio)
	Display method	DLP™ chip × 1, DLP™ system
	Pixels	786,432 (1,024 × 768) × 1, total of 786,432 pixels
Lens	PT-DX820W/B	Powered zoom/focus lenses (1.7–2.4:1), F 1.7–1.9, f 25.6–35.7 mm
	PT-DX820LW/LB	Optional powered zoom/focus lenses and fixed-focus lens
Lamp		310 W UHM lamps (× 2)
Screen size		1.27–15.24 m (50–600 inches) *1.27 – 5.08 m (50 – 200 inches) with the ET-DLE055 (16:10 aspect ratio) *2.54 – 8.89 m (100 – 350 inches) with the ET-DLE030 (16:10 aspect ratio)
Brightness*2		8,200 lumens (dual lamp, LAMP MODE: NORMAL)
Center-to-corner uniformity*2		90%
Contrast*2		
Resolution		1,024 × 768 pixels
Scanning frequency	HDMI/DVI-D	fH: 15–100 kHz, fV: 24–120 Hz, dot clock: 25–162 MHz
	RGB	fH: 15–100 kHz, fV: 24–120 Hz, dot clock: 20–162 MHz
	YPBPR (YCBCR)	525i (480i): fH 15.75 kHz; fV 60 Hz, 625i (576i): fH 15.63 kHz; fV 50 Hz, 525p (480p): fH 31.50 kHz; fV 60 Hz, 625p (576p): fH 31.25 kHz; fV 50 Hz, 750 (720)/60p: fH 45.00 kHz; fV 60 Hz, 750 (720)/50p: fH 37.50 kHz; fV 50 Hz, 1125 (1035)/60i: fH 33.75 kHz; fV 60 Hz, 1125 (1080)/60i: fH 33.75 kHz; fV 60 Hz, 1125 (1080)/50i: fH 28.13 kHz; fV 50 Hz, 1125 (1080)/25p: fH 28.13 kHz; fV 25 Hz, 1125 (1080)/24p: fH 27.00 kHz; fV 24 Hz, 1125 (1080)/24sF: fH 27.00 kHz; fV 48 Hz, 1125 (1080)/30p: fH 33.75 kHz; fV 30 Hz, 1125 (1080)/60p: fH 67.50 kHz; fV 60 Hz, 1125 (1080)/50p: fH 56.25 kHz; fV 50 Hz
	Video/S-Video	fH: 15.75 kHz, fV: 60 Hz [NTSC/NTSC4.43/PAL-M/PAL60] fH: 15.63 kHz, fV: 50 Hz [PAL/PAL-N/SECAM]
Optical axis shift		Vertical: -13% – +50% (powered) (-13% – +45% with the ET-DLE085/DLE105) horizontal: -10% – +30% (powered) (-10% – +28% with the ET-DLE085/DLE105) **NOTE: Optical axis shift function cannot be operated when used with the ET-DLE055. If using the ET-DLE030, the optical axis is fixed.**
Keystone correction range		Vertical ±40°, horizontal: ±15° (Vertical: ±22° with the ET-DLE055/DLE085/DLE105), (Vertical: ±5° with the ET-DLE030) Curved correction (Geometric adjustment) 4 corner correction
Installation		Ceiling/floor, front/rear

Terminals	HDMI IN	HDMI 19-pin × 1, Deep Color, compatible with HDCP,
	DVI-D IN	DVI-D 24-pin × 1, DVI 1.0 compliant, HDCP compatible, for single link only
	RGB 1 IN	BNC × 5
	R, G, B	R: 0.7 Vp-p, 75 ohms, G: 0.7 Vp-p (G: 1.0 Vp-p for sync on G), 75 ohms, B: 0.7 Vp-p, 75 ohms HD, VD/SYNC: TTL, high impedance, positive/negative automatic **NOTE: SYNC/HD and VD terminals do not accept tri-level sync signals.**
	Y, P_B, P_R (Y, C_B, C_R)	Y: 1.0 Vp-p (including sync signal), P_B/P_R (C_B/C_R): 0.7 Vp-p, 75 ohms
	S-Video signal	Y: 1.0 Vp-p, C: 0.286 Vp-p, 75 ohms
	Video signal	1.0 Vp-p, 75 ohms
	RGB 2 IN	D-sub HD 15-pin (female) × 1
	R, G, B	R: 0.7 Vp-p, 75 ohms, G: 0.7 Vp-p (G: 1.0 Vp-p for sync on G), 75 ohms, B: 0.7 Vp-p, 75 ohms HD, VD/SYNC: TTL, high impedance, positive/negative automatic **NOTE: SYNC/HD and VD terminals do not accept tri-level sync signals.**
	Y, P_B, P_R (Y, C_B, C_R)	Y: 1.0 Vp-p (including sync signal), P_B/P_R (C_B/C_R): 0.7 Vp-p, 75 ohms
	SERIAL IN	D-sub 9-pin (female) × 1 for external control (RS-232C compliant)
	SERIAL OUT	D-sub 9-pin (male) × 1 for link control (RS-232C compliant)
	REMOTE 1 IN	M3 jack × 1 for wired remote control
	REMOTE 1 OUT	M3 jack × 1 for link control
	REMOTE 2 IN	D-sub 9-pin (female) × 1 for external control (parallel)
	LAN/DIGITAL LINK	RJ-45 × 1 for network and DIGITAL LINK (video/network/serial control) connection, 100Base-TX, compatible with Art-Net, compliant with PJLink™ (class 1), Deep Color, compatible with HDCP,
	USB	DC OUT (5V/0.9A)

Power cord length	3.0 m (9 ft 10 in)
Cabinet materials	Molded plastic (PT-DX820W/DX820LW : White) (PT-DX820B/DX820LB : Black)
Dimensions (W × H × D)	498 × 175*3 × 521 mm (19-19/32 × 6-7/8*3 × 20-1/2 inches) (with supplied lens) 498 × 175*3 × 508 mm (19-19/32 × 6-7/8*3 × 20 inches) (without lens, with lens cap) 498 × 175*3 × 498 mm (19-19/32 × 6-7/8*3 × 19-19/32 inches) (without lens and lens cap)
Weight*4	Approx. 17.8 kg (39.2 lbs) (with supplied lens) Approx. 17.0 kg (37.5 lbs) (without lens)
Operation noise*2	30 dB (dual lamp operation, LAMP MODE: NORMAL), 28 dB (dual lamp operation, LAMP MODE: ECO)
Operating temperature	0–45 °C (32–113 °F)*5
Operating humidity	10%–80% (no condensation)

Remote control unit

Power supply	3 V DC (AAA type battery × 2)
Operation range	Approx. 30 m (98 ft 5 in) when operated from directly in front of the signal receptor
Dimensions (W × H × D)	48 × 145 × 27 mm (1-28/32 × 5-23/32 × 1-1/16 inches)
Weight	Approx. 102 g (3.6 oz) (including batteries)

Supplied accessories

Power cord (× 1)
Wireless/wired remote control unit (× 1)
Batteries for remote control (AAA type × 2)
Operating Instructions (× 1)
Software CD-ROM (Logo Transfer Software, Multi Projector Monitoring & Control Software)e) (× 1)
Lens Mount cover (× 1)
Lens cover (× 1)
Clasp for lamp unit (× 2)

Optional accessories

Digital interface box	ET-YFB100G
Digital LINK Switcher	ET-YFB200G
Zoom lens (0.8–1.0:1)	ET-DLE085
Zoom lens (1.0–1.4:1)	ET-DLE105
Zoom lens (1.3–2.0:1)	ET-DLE150
Zoom lens (2.4–3.7:1)	ET-DLE250
Zoom lens (3.7–5.6:1)	ET-DLE350
Zoom lens (5.5–8.9:1)	ET-DLE450
Fixed-focus lens (0.4:1)	ET-DLE030
Fixed-focus lens (0.8:1)	ET-DLE055
Ceiling mount bracket	ET-PKD120H (for high ceilings) ET-PKD120S (for low ceilings)
High-ceiling mount bracket (6-axis adjustment mechanism)	ET-PKD130H
Attachment for ceiling mount bracket	ET-PKD130B
Early Warning Software	ET-SWA100
Replacement lamp unit	ET-LAD70 ET-LAD70W (Twin Pack)

Weights and dimensions shown are approximate. Specifications and appearance are subject to change without notice.

***1 When the STANDBY MODE is set to ECO, network functions such as power on over the LAN network will not operate, and the serial output terminal cannot be used. Also, only certain commands can be received for external control using the serial terminal.**

***2 Measurement, measuring conditions, and method of notation all comply with ISO 21118 international standards.**

***3 With legs at shortest position.**

***4 Average value. May differ depending on models.**

***5 The operating temperature range is 0 °C to 40 °C (32 °F to 104 °F) when the fan control is set to High Altitude mode (for altitudes from 1,400 m to 2,700 m (4,593 ft to 8,858 ft) above sea level). Also, if the ambient temperature exceeds 40 °C (104 °F) (35 °C (95 °F) in High Altitude mode) when the projector is being used with Lamp Select set to Dual and Lamp Power set to High, the light output may be reduced approximately 20% to protect the projector.**

DLP™ Projectors

PT-DX820W/DX820LW/DX820B/DX820LB

Dimensions

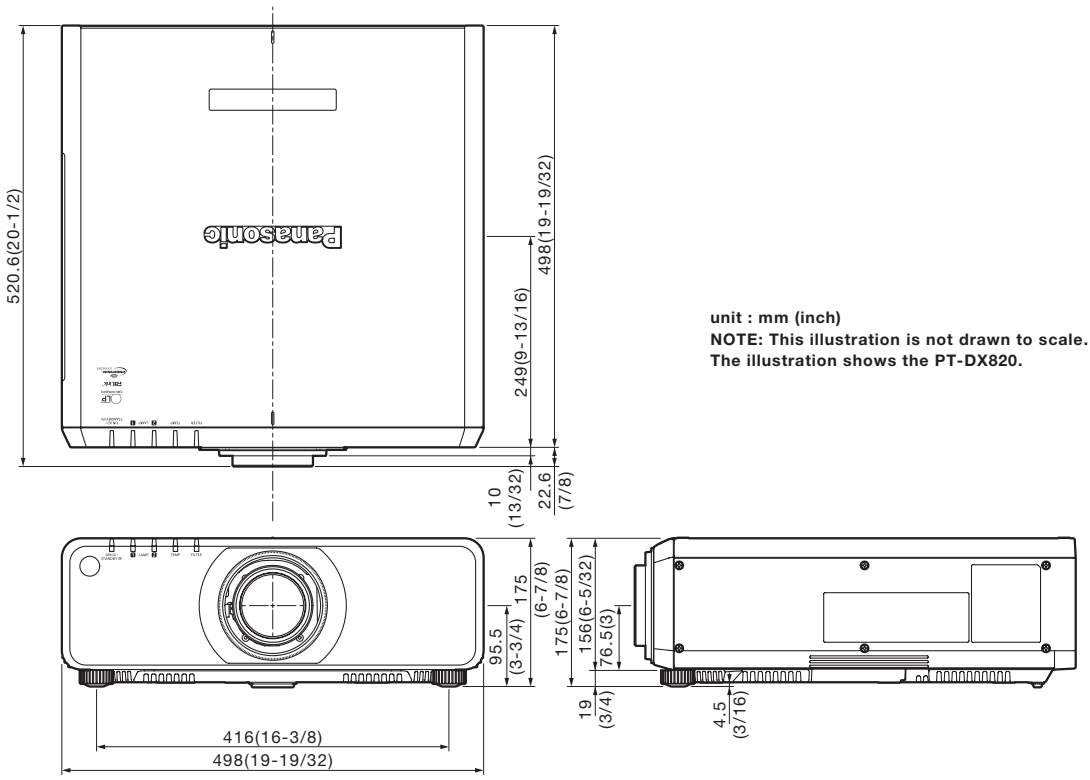

unit : mm (inch)
NOTE: This illustration is not drawn to scale.
The illustration shows the PT-DX820.

Terminals

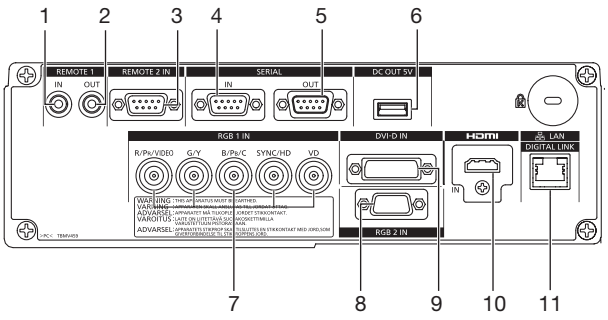

1 Remote 1 input
2 Remote 1 output
3 Remote 2 input
4 Serial input
5 Serial output
6 Dc out 5v
7 RGB 1 input
8 RGB 2 Input
9 DVI-D input
10 HDMI input
11 LAN/DIGITAL LINK connector

DLP™ Projectors

PT-DX820W/DX820LW/DX820B/DX820LB

Standard setting-up position (If using other than the ET-DLE030)

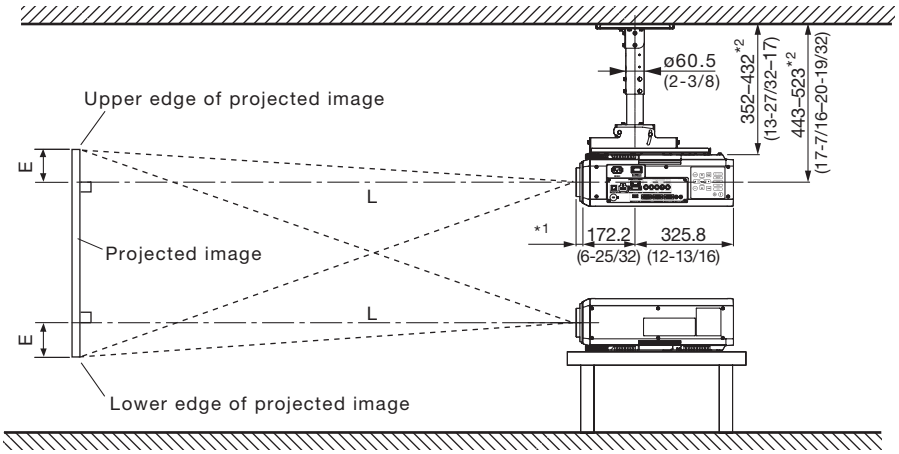

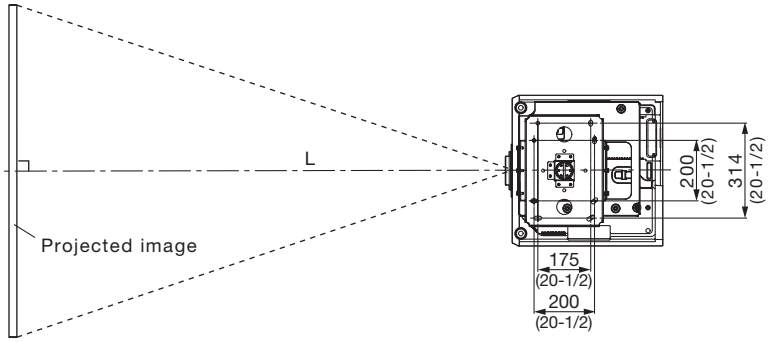

***1 When the lens protrudes to the maximum.**
64 mm (2-17/32 in) with the ET-DLE085
68 mm (2-11/16 in) with the ET-DLE105
24 mm (15/16 in) with the ET-DLE150
23 mm (29/32 in) with the supplied lens/ET-DLE170
25 mm (31/32 in) with the ET-DLE250
31 mm (1-7/32 in) with the ET-DLE350
75 mm (2-15/16 in) with the ET-DLE450
7 mm (9/32 in) with the ET-DLE055

***2 Adjustable in 40 mm (1-9/16 in) steps.**

unit : mm (inch)

NOTE:

Illustrations show the projector installed using optional ceiling mount bracket ET-PKD120H, optional bracket assembly ET-PKD130B and an optional lens.

This illustration is not drawn to scale.

Caution:

- All construction work should be done by a qualified technician.
- When mounting to the ceiling, use the special mounting bracket. Furthermore, in order to prevent it from falling down from the ceiling, use the supplied wire on the mounting bracket.

DLP™ Projectors

PT-DX820W/DX820LW/DX820B/DX820LB

Projection distance for 4:3 aspect ratio screen (If using other than the ET-DLE030)

Unit: meters

Screen size (diagonal)		Distance to screen (L)															Height from the edge of screen tocenter of lens (H)		
		Zoom lens														Fixed-focus lens	Zoom lens		Fixed-focus lens
		ET-DLE085		ET-DLE105		ET-DLE150		*Supplied lens/ ET-DLE170*		ET-DLE250		ET-DLE350		ET-DLE450		ET-DLE055	*Supplied lens*/ ET-DLE150/ 250/350/450	ET-DLE085/ 105	ET-DLE055
[m]	[in]	min.	max.	min.	max.	min.	max.	*min.*	*max.*	min.	max.	min.	max.	min.	max.				
1.27	50	0.81	1.01	1.01	1.38	1.34	1.97	*1.78*	*2.51*	2.36	3.78	3.71	5.68	5.52	8.91	0.81	0 – 0.48	0.04 – 0.48	0.38
1.52	60	0.98	1.22	1.22	1.66	1.62	2.37	*2.15*	*3.03*	2.85	4.55	4.48	6.84	6.69	10.75	0.98	0 – 0.58	0.05 – 0.58	0.46
1.78	70	1.15	1.43	1.43	1.94	1.90	2.77	*2.52*	*3.55*	3.34	5.32	5.25	8.01	7.86	12.60	1.15	0 – 0.67	0.05 – 0.67	0.53
2.03	80	1.32	1.64	1.65	2.23	2.18	3.18	*2.89*	*4.06*	3.83	6.09	6.02	9.17	9.02	14.44	1.32	0 – 0.77	0.06 – 0.77	0.61
2.29	90	1.49	1.85	1.86	2.51	2.46	3.58	*3.26*	*4.58*	4.31	6.86	6.79	10.33	10.19	16.28	1.49	0 – 0.86	0.07 – 0.86	0.69
2.54	100	1.66	2.07	2.07	2.80	2.74	3.98	*3.63*	*5.10*	4.80	7.63	7.56	11.50	11.35	18.12	1.66	0 – 0.96	0.08 – 0.96	0.76
3.05	120	2.00	2.49	2.49	3.37	3.30	4.79	*4.37*	*6.13*	5.78	9.17	9.10	13.82	13.68	21.81	2.01	0 – 1.15	0.09 – 1.15	0.91
3.81	150	2.51	3.12	3.13	4.22	4.14	6.00	*5.48*	*7.68*	7.24	11.49	11.41	17.31	17.18	27.33	2.52	0 – 1.44	0.11 – 1.44	1.14
5.08	200	3.36	4.18	4.19	5.64	5.54	8.02	*7.33*	*10.26*	9.69	15.34	15.26	23.13	23.00	36.54	3.38	0 – 1.92	0.15 – 1.92	1.52
6.35	250	4.21	5.23	5.25	7.06	6.94	10.03	*9.18*	*12.85*	12.13	19.20	19.11	28.94	28.83	45.75	–	0 – 2.40	0.19 – 2.40	–
7.62	300	5.07	6.29	6.31	8.49	8.33	12.05	*11.03*	*15.43*	14.57	23.06	22.96	34.76	34.66	54.97	–	0 – 2.88	0.23 – 2.88	–
8.89	350	5.92	7.34	7.37	9.91	9.73	14.07	*12.88*	*18.02*	17.01	26.91	26.81	40.57	40.48	64.18	–	0 – 3.36	0.27 – 3.36	–
10.16	400	6.77	8.40	8.43	11.33	11.13	16.08	*14.73*	*20.60*	19.45	30.77	30.65	46.39	46.31	73.39	–	0 – 3.84	0.30 – 3.84	–
12.70	500	8.48	10.51	10.56	14.18	13.92	20.12	*18.43*	*25.77*	24.33	38.48	38.35	58.02	57.96	91.81	–	0 – 4.80	0.38 – 4.80	–
15.24	600	10.18	12.62	12.68	17.02	16.72	24.15	*22.13*	*30.94*	29.22	46.19	46.05	69.65	69.61	110.23	–	0 – 5.76	0.46 – 5.76	–

Unit: feet

Screen size (diagonal)		Distance to screen (L)															Height from the edge of screen tocenter of lens (H)		
		Zoom lens														Fixed-focus lens	Zoom lens		Fixed-focus lens
		ET-DLE085		ET-DLE105		ET-DLE150		*Supplied lens/ ET-DLE170*		ET-DLE250		ET-DLE350		ET-DLE450		ET-DLE055	*Supplied lens*/ ET-DLE150/ 250/350/450	ET-DLE085/ 105	ET-DLE055
[m]	[in]	min.	max.	min.	max.	min.	max.	*min.*	*max.*	min.	max.	min.	max.	min.	max.				
1.27	50	2.6	3.3	3.3	4.5	4.4	6.5	*5.8*	*8.2*	7.7	12.4	12.2	18.6	18.1	29.2	2.7	0 – 1.6	-0.1 – 1.6	1.3
1.52	60	3.2	4.0	4.0	5.4	5.3	7.8	*7.0*	*9.9*	9.4	14.9	14.7	22.5	21.9	35.3	3.2	0 – 1.9	-0.2 – 1.9	1.5
1.78	70	3.8	4.7	4.7	6.4	6.2	9.1	*8.3*	*11.6*	11.0	17.5	17.2	26.3	25.8	41.3	3.8	0 – 2.2	-0.2 – 2.2	1.7
2.03	80	4.3	5.4	5.4	7.3	7.2	10.4	*9.5*	*13.3*	12.6	20.0	19.8	30.1	29.6	47.4	4.3	0 – 2.5	-0.2 – 2.5	2.0
2.29	90	4.9	6.1	6.1	8.2	8.1	11.7	*10.7*	*15.0*	14.2	22.5	22.3	33.9	33.4	53.4	4.9	0 – 2.8	-0.2 – 2.8	2.3
2.54	100	5.4	6.8	6.8	9.2	9.0	13.1	*11.9*	*16.7*	15.8	25.0	24.8	37.7	37.2	59.5	5.5	0 – 3.1	-0.2 – 3.1	2.5
3.05	120	6.6	8.2	8.2	11.1	10.8	15.7	*14.3*	*20.1*	19.0	30.1	29.9	45.4	44.9	71.5	6.6	0 – 3.8	-0.3 – 3.8	3.0
3.81	150	8.2	10.2	10.3	13.8	13.6	19.7	*18.0*	*25.2*	23.8	37.7	37.4	56.8	56.4	89.7	8.3	0 – 4.7	-0.4 – 4.7	3.8
5.08	200	11.0	13.7	13.7	18.5	18.2	26.3	*24.0*	*33.7*	31.8	50.3	50.1	75.9	75.5	119.9	11.1	0 – 6.3	-0.5 – 6.3	5.0
6.35	250	13.8	17.2	17.2	23.2	22.8	32.9	*30.1*	*42.2*	39.8	63.0	62.7	95.0	94.6	150.1	–	0 – 7.9	-0.6 – 7.9	–
7.62	300	16.6	20.6	20.7	27.9	27.3	39.5	*36.2*	*50.6*	47.8	75.6	75.3	114.0	113.7	180.3	–	0 – 9.4	-0.8 – 9.4	–
8.89	350	19.4	24.1	24.2	32.5	31.9	46.1	*42.3*	*59.1*	55.8	88.3	87.9	133.1	132.8	210.6	–	0 – 11.0	-0.9 – 11.0	–
10.16	400	22.2	27.5	27.7	37.2	36.5	52.8	*48.3*	*67.6*	63.8	100.9	100.6	152.2	151.9	240.8	–	0 – 12.6	-1.0 – 12.6	–
12.70	500	27.8	34.5	34.6	46.5	45.7	66.0	*60.5*	*84.5*	79.8	126.2	125.8	190.4	190.2	301.2	–	0 – 15.8	-1.3 – 15.8	–
15.24	600	33.4	41.4	41.6	55.8	54.9	79.2	*72.6*	*101.5*	95.9	151.5	151.1	228.5	228.4	361.7	–	0 – 18.9	-1.5 – 18.9	–

- **The value for L (distance to screen) varies slightly within ±5% depending on the zoom lens characteristics.**
- **The zoom lens characteristics may cause slight image distortion.**
- **When vertical keystone correction is used, the image is corrected in the direction that reduces its projected size.**
- **The brightness varies depending on the zoom setting.**

Note: When the ET-DLE055 is mounted, the optical lens shift function cannot be used.

DLP™ Projectors

PT-DX820W/DX820LW/DX820B/DX820LB

Projection distance for 16:9 aspect ratio screen (If using other than the ET-DLE030)

Unit: meters

Screen size (diagonal)		Distance to screen (L)															Height from the edge of screen tocenter of lens (H)		
		Zoom lens														Fixed-focus lens	Zoom lens		Fixed-focus lens
		ET-DLE085		ET-DLE105		ET-DLE150		*Supplied lens/ ET-DLE170*		ET-DLE250		ET-DLE350		ET-DLE450		ET-DLE055	*Supplied lens*/ ET-DLE150/ 250/350/450	ET-DLE085/ 105	ET-DLE055
[m]	[in]	min.	max.	min.	max.	min.	max.	*min.*	*max.*	min.	max.	min.	max.	min.	max.				
1.27	50	0.88	1.11	1.10	1.50	1.47	2.15	***1.94***	***2.74***	2.58	4.12	4.06	6.20	6.05	9.74	0.88	-0.21 – 0.52	-0.16 – 0.52	0.31
1.52	60	1.07	1.34	1.34	1.81	1.77	2.59	***2.34***	***3.31***	3.11	4.96	4.90	7.47	7.32	11.74	1.07	-0.25 – 0.63	-0.19 – 0.63	0.37
1.78	70	1.25	1.57	1.57	2.12	2.08	3.03	***2.75***	***3.87***	3.64	5.80	5.73	8.74	8.58	13.75	1.26	-0.29 – 0.73	-0.23 – 0.73	0.44
2.03	80	1.44	1.79	1.80	2.43	2.38	3.47	***3.15***	***4.43***	4.18	6.64	6.57	10.00	9.85	15.76	1.44	-0.33 – 0.84	-0.26 – 0.84	0.50
2.29	90	1.62	2.02	2.03	2.74	2.69	3.91	***3.55***	***4.99***	4.71	7.48	7.41	11.27	11.12	17.76	1.63	-0.37 – 0.94	-0.29 – 0.94	0.56
2.54	100	1.81	2.25	2.26	3.05	2.99	4.34	***3.96***	***5.56***	5.24	8.32	8.25	12.54	12.39	19.77	1.82	-0.41 – 1.05	-0.32 – 1.05	0.62
3.05	120	2.18	2.71	2.72	3.67	3.60	5.22	***4.76***	***6.68***	6.30	10.00	9.93	15.07	14.93	23.78	2.19	-0.49 – 1.26	-0.39 – 1.26	0.75
3.81	150	2.74	3.40	3.42	4.60	4.51	6.54	***5.97***	***8.37***	7.90	12.52	12.44	18.87	18.74	29.81	2.75	-0.62 – 1.57	-0.49 – 1.57	0.93
5.08	200	3.67	4.55	4.57	6.15	6.04	8.74	***7.99***	***11.19***	10.56	16.72	16.64	25.21	25.09	39.84	3.68	-0.82 – 2.09	-0.65 – 2.09	1.25
6.35	250	4.60	5.70	5.73	7.70	7.56	10.94	***10.01***	***14.00***	13.22	20.93	20.83	31.54	31.44	49.88	–	-1.03 – 2.62	-0.81 – 2.62	–
7.62	300	5.52	6.85	6.88	9.25	9.08	13.13	***12.02***	***16.82***	15.88	25.13	25.02	37.88	37.78	59.91	–	-1.23 – 3.14	-0.97 – 3.14	–
8.89	350	6.45	8.00	8.04	10.80	10.61	15.33	***14.04***	***19.63***	18.54	29.33	29.22	44.22	44.13	69.95	–	-1.44 – 3.66	-1.13 – 3.66	–
10.16	400	7.38	9.15	9.19	12.35	12.13	17.53	***16.05***	***22.45***	21.20	33.53	33.41	50.55	50.48	79.98	–	-1.64 – 4.18	-1.30 – 4.18	–
12.70	500	9.24	11.45	11.50	15.45	15.17	21.92	***20.09***	***28.08***	26.52	41.93	41.79	63.22	63.17	100.05	–	-2.05 – 5.23	-1.62 – 5.23	–
15.24	600	11.10	13.75	13.82	18.55	18.22	26.31	***24.12***	***33.71***	31.84	50.33	50.18	75.89	75.87	120.12	–	-2.47 – 6.28	-1.94 – 6.28	–

Unit: feet

Screen size (diagonal)		Distance to screen (L)															Height from the edge of screen tocenter of lens (H)		
		Zoom lens														Fixed-focus lens	Zoom lens		Fixed-focus lens
		ET-DLE085		ET-DLE105		ET-DLE150		*Supplied lens/ ET-DLE170*		ET-DLE250		ET-DLE350		ET-DLE450		ET-DLE055	*Supplied lens*/ ET-DLE150/ 250/350/450	ET-DLE085/ 105	ET-DLE055
[m]	[in]	min.	max.	min.	max.	min.	max.	*min.*	*max.*	min.	max.	min.	max.	min.	max.				
1.27	50	2.9	3.6	3.6	4.9	4.8	7.0	***6.4***	***9.0***	8.5	13.5	13.3	20.3	19.8	31.9	2.9	-0.7 – 1.7	-0.5 – 1.7	1.0
1.52	60	3.5	4.4	4.4	5.9	5.8	8.5	***7.7***	***10.8***	10.2	16.3	16.1	24.5	24.0	38.5	3.5	-0.8 – 2.1	-0.6 – 2.1	1.2
1.78	70	4.1	5.1	5.2	7.0	6.8	9.9	***9.0***	***12.7***	12.0	19.0	18.8	28.7	28.1	45.1	4.1	-0.9 – 2.4	-0.7 – 2.4	1.4
2.03	80	4.7	5.9	5.9	8.0	7.8	11.4	***10.3***	***14.5***	13.7	21.8	21.6	32.8	32.3	51.7	4.7	-1.1 – 2.7	-0.8 – 2.7	1.6
2.29	90	5.3	6.6	6.6	9.0	8.8	12.8	***11.7***	***16.4***	15.4	24.5	24.3	37.0	36.5	58.3	5.3	-1.2 – 3.1	-1.0 – 3.1	1.8
2.54	100	5.9	7.4	7.4	10.0	9.8	14.3	***13.0***	***18.2***	17.2	27.3	27.1	41.1	40.7	64.9	6.0	-1.3 – 3.4	-1.1 – 3.4	2.0
3.05	120	7.2	8.9	8.9	12.0	11.8	17.1	***15.6***	***21.9***	20.7	32.8	32.6	49.4	49.0	78.0	7.2	-1.6 – 4.1	-1.3 – 4.1	2.5
3.81	150	9.0	11.2	11.2	15.1	14.8	21.5	***19.6***	***27.5***	25.9	41.1	40.8	61.9	61.5	97.8	9.0	-2.0 – 5.1	-1.6 – 5.1	3.1
5.08	200	12.0	14.9	15.0	20.2	19.8	28.7	***26.2***	***36.7***	34.6	54.9	54.6	82.7	82.3	130.7	12.1	-2.7 – 6.9	-2.1 – 6.9	4.1
6.35	250	15.1	18.7	18.8	25.3	24.8	35.9	***32.8***	***45.9***	43.4	68.7	68.3	103.5	103.1	163.6	–	-3.4 – 8.6	-2.7 – 8.6	–
7.62	300	18.1	22.5	22.6	30.3	29.8	43.1	***39.4***	***55.2***	52.1	82.4	82.1	124.3	124.0	196.6	–	-4.0 – 10.3	-3.2 – 10.3	–
8.89	350	21.2	26.3	26.4	35.4	34.8	50.3	***46.1***	***64.4***	60.8	96.2	95.8	145.1	144.8	229.5	–	-4.7 – 12.0	-3.7 – 12.0	–
10.16	400	24.2	30.0	30.2	40.5	39.8	57.5	***52.7***	***73.7***	69.5	110.0	109.6	165.8	165.6	262.4	–	-5.4 – 13.7	-4.2 – 13.7	–
12.70	500	30.3	37.6	37.7	50.7	49.8	71.9	***65.9***	***92.1***	87.0	137.6	137.1	207.4	207.3	328.2	–	-6.7 – 17.2	-5.3 – 17.2	–
15.24	600	36.4	45.1	45.3	60.9	59.8	86.3	***79.1***	***110.6***	104.5	165.1	164.6	249.0	248.9	394.1	–	-8.1 – 20.6	-6.4 – 20.6	–

- **The value for L (distance to screen) varies slightly within ±5% depending on the zoom lens characteristics.**
- **The zoom lens characteristics may cause slight image distortion.**
- **When vertical keystone correction is used, the image is corrected in the direction that reduces its projected size.**
- **The brightness varies depending on the zoom setting.**

Note: When the ET-DLE055 is mounted, the optical lens shift function cannot be used.

DLP™ Projectors

PT-DX820W/DX820LW/DX820B/DX820LB

Standard setting-up position (If using the ET-DLE030)

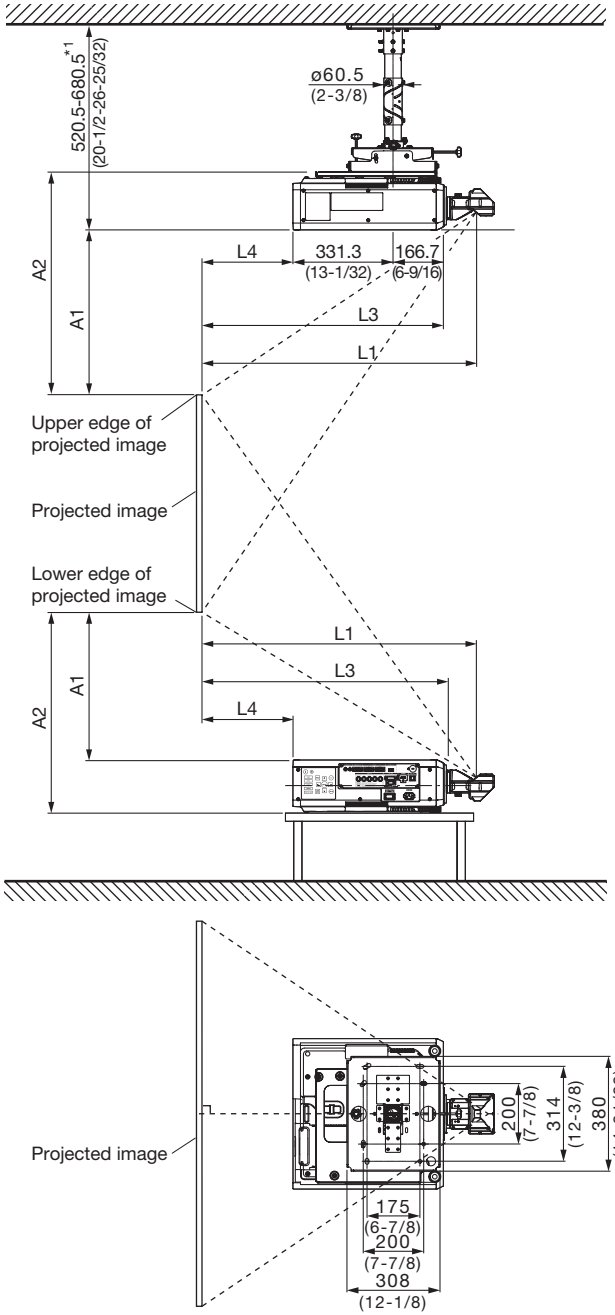

NOTE:

Illustrations show the projector installed using optional ceiling mount bracket (6-axis adjustment mechanism) ET-PKD130H, optional bracket assembly ET-PKD130B and an optional lens.

***1 Continuous height adjustment possible**

NOTE:

Illustrations show the projector installed using optional ceiling mount bracket (6-axis adjustment mechanism) ET-PKD130H, optional bracket assembly ET-PKD130B and an optional lens.

This illustration is not drawn to scale.

unit : mm (inch)

Caution:

- All construction work should be done by a qualified technician.
- When mounting to the ceiling, use the special mounting bracket. Furthermore, in order to prevent it from falling down from the ceiling, use the supplied wire on the mounting bracket.

DLP™ Projectors

PT-DX820W/DX820LW/DX820B/DX820LB

Projection distance for 4:3 aspect ratio screen (If using the ET-DLE030)

Unit : meters

Throw ratio				Ultra-short focal length lens ET-DLE030 Close-up system dimensions					
				0.39:1	(0.41:1)				
Diagonal image size (Inches)	Diagonal image size (m)	Height (SH)	Width (SW)	Projection distance (From mirror reflective surface to screen) (L1)	From tip of lens to screen (L2)	From front of set to screen (L3)	From rear of set to screen (L4)	From top of set to bottom edge of screen (A1)	From bottom of set to bottom edge of screen (A2)
100	2.54	1.52	2.03	0.80	0.82	0.65	0.16	0.41	0.59
120	3.05	1.83	2.44	0.96	0.98	0.81	0.32	0.51	0.68
150	3.81	2.29	3.05	1.20	1.22	1.05	0.55	0.65	0.83
200	5.08	3.05	4.06	1.60	1.62	1.45	0.95	0.89	1.06
250	6.35	3.81	5.08	1.99	2.02	1.85	1.35	1.13	1.30
300	7.62	4.57	6.10	2.39	2.41	2.25	1.75	1.37	1.54
350	8.89	5.33	7.11	2.79	2.81	2.64	2.15	1.61	1.78

Unit : feet

Throw ratio				Ultra-short focal length lens ET-DLE030 Close-up system dimensions					
				0.39:1	(0.41:1)				
Diagonal image size (Inches)	Diagonal image size (m)	Height (SH)	Width (SW)	Projection distance (From mirror reflective surface to screen) (L1)	From tip of lens to screen (L2)	From front of set to screen (L3)	From rear of set to screen (L4)	From top of set to bottom edge of screen (A1)	From bottom of set to bottom edge of screen (A2)
100	2.54	5.0	6.7	2.6	2.7	2.1	0.5	1.3	1.9
120	3.05	6.0	8.0	3.1	3.2	2.7	1.0	1.7	2.2
150	3.81	7.5	10.0	3.9	4.0	3.5	1.8	2.1	2.7
200	5.08	10.0	13.3	5.2	5.3	4.8	3.1	2.9	3.5
250	6.35	12.5	16.7	6.5	6.6	6.1	4.4	3.7	4.3
300	7.62	15.0	20.0	7.8	7.9	7.4	5.7	4.5	5.1
350	8.89	17.5	23.3	9.2	9.2	8.7	7.0	5.3	5.8

* The value for L1 may contain an error of within ±5%.
* When using vertical keystone correction, the images will be corrected so that they will tend to be smaller than the specified screen size.
* This measurement is not the distance between the rear of the projector and the wall, but is instead the distance between the rear of the projector and the screen surface. Leave at least 500 mm of space between the rear of the projector and the wall and any other objects in order to provide adequate ventilation space. If setting up the projector in a closed room, be sure to provide separate air conditioning and ventilation equipment. If there is insufficient ventilation in the room, radiated heat may build up and cause the protection circuit of the projector to operate.

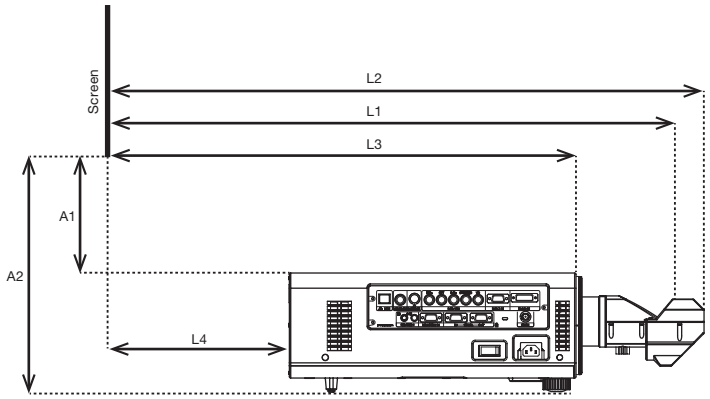

L1: Projection distance
(from screen to mirror reflective surface)
L2: From screen to tip of lens
L3: From screen to front of set
L4: From screen to rear of set
A1: From bottom edge of screen to top of set
A2: From bottom edge of screen to bottom of set

Projection Distance Calculation Table

Screen aspect ratio 4:3

Projection distance calculation formula

L1 (m) = 0.3133 x Diagonal image size + 0.0047

Calculation formula for distance from top of set to bottom edge of screen

A1 (m) = 0.1881 x Diagonal image size - 0.0665

DLP™ Projectors

PT-DX820W/DX820LW/DX820B/DX820LB

Projection distance for 16:9 aspect ratio screen (If using the ET-DLE030)

Unit : meters

Throw ratio				Ultra-short focal length lens ET-DLE030 Close-up system dimensions					
				0.39:1	(0.4:1)				
Diagonal image size (Inches)	Diagonal image size (m)	Height (SH)	Width (SW)	Projection distance (From mirror reflective surface to screen) (L1)	From tip of lens to screen (L2)	From front of set to screen (L3)	From rear of set to screen (L4)	From top of set to bottom edge of screen (A1)	From bottom of set to bottom edge of screen (A2)
100	2.54	1.25	2.21	0.87	0.89	0.73	0.23	0.66	0.84
120	3.05	1.49	2.66	1.04	1.07	0.90	0.40	0.81	0.98
150	3.81	1.87	3.32	1.31	1.33	1.16	0.66	1.03	1.20
200	5.08	2.49	4.43	1.74	1.76	1.59	1.09	1.39	1.56
250	6.35	3.11	5.53	2.17	2.19	2.03	1.53	1.75	1.93
300	7.62	3.74	6.64	2.61	2.63	2.46	1.96	2.12	2.29
350	8.89	4.36	7.75	3.04	3.06	2.89	2.39	2.48	2.66

Unit : feet

Throw ratio				Ultra-short focal length lens ET-DLE030 Close-up system dimensions					
				0.39:1	(0.4:1)				
Diagonal image size (Inches)	Diagonal image size (m)	Height (SH)	Width (SW)	Projection distance (From mirror reflective surface to screen) (L1)	From tip of lens to screen (L2)	From front of set to screen (L3)	From rear of set to screen (L4)	From top of set to bottom edge of screen (A1)	From bottom of set to bottom edge of screen (A2)
100	2.54	4.1	7.3	2.9	2.9	2.4	0.7	2.2	2.7
120	3.05	4.9	8.7	3.4	3.5	2.9	1.3	2.6	3.2
150	3.81	6.1	10.9	4.3	4.4	3.8	2.2	3.4	3.9
200	5.08	8.2	14.5	5.7	5.8	5.2	3.6	4.6	5.1
250	6.35	10.2	18.2	7.1	7.2	6.6	5.0	5.8	6.3
300	7.62	12.3	21.8	8.5	8.6	8.1	6.4	6.9	7.5
350	8.89	14.3	25.4	10.0	10.0	9.5	7.9	8.1	8.7

* The value for L1 may contain an error of within ±5%.
* When using vertical keystone correction, the images will be corrected so that they will tend to be smaller than the specified screen size.
* This measurement is not the distance between the rear of the projector and the wall, but is instead the distance between the rear of the projector and the screen surface. Leave at least 500 mm of space between the rear of the projector and the wall and any other objects in order to provide adequate ventilation space. If setting up the projector in a closed room, be sure to provide separate air conditioning and ventilation equipment. If there is insufficient ventilation in the room, radiated heat may build up and cause the protection circuit of the projector to operate.

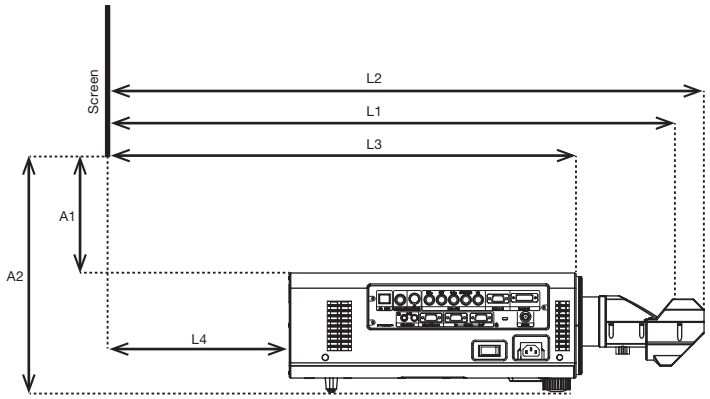

L1: Projection distance
(from screen to mirror reflective surface)
L2: From screen to tip of lens
L3: From screen to front of set
L4: From screen to rear of set
A1: From bottom edge of screen to top of set
A2: From bottom edge of screen to bottom of set

Projection Distance Calculation Table

Screen aspect ratio 16:9

Projection distance calculation formula

L1 (m) = 0.3413 x Diagonal image size + 0.0047

Calculation formula for distance from top of set to bottom edge of screen

A1 (m) = 0.2866 x Diagonal image size - 0.0665

Calculation of the projection distance

For a screen size different from the above, use the equation below to calculate the projection distance.

Aspect ratio 4:3

ET-DLE085	minimum	L (m) = (diagonal screen size in inches) × 0.0170 - 0.0471
	maximum	L (m) = (diagonal screen size in inches) × 0.0211 - 0.0442
ET-DLE105	minimum	L (m) = (diagonal screen size in inches) × 0.0212 - 0.0511
	maximum	L (m) = (diagonal screen size in inches) × 0.0284 - 0.0472
ET-DLE150	minimum	L (m) = (diagonal screen size in inches) × 0.0280 - 0.0540
	maximum	L (m) = (diagonal screen size in inches) × 0.0403 - 0.0498
Supplied lens	*minimum*	***L (m) = (diagonal screen size in inches) × 0.0370 - 0.0746***
	maximum	***L (m) = (diagonal screen size in inches) × 0.0517 - 0.0725***
ET-DLE250	minimum	L (m) = (diagonal screen size in inches) × 0.0488 - 0.0800
	maximum	L (m) = (diagonal screen size in inches) × 0.0771 - 0.0792
ET-DLE350	minimum	L (m) = (diagonal screen size in inches) × 0.0770 - 0.1351
	maximum	L (m) = (diagonal screen size in inches) × 0.1163 - 0.1346
ET-DLE450	minimum	L (m) = (diagonal screen size in inches) × 0.1165 - 0.3017
	maximum	L (m) = (diagonal screen size in inches) × 0.1842 - 0.2991
ET-DLE030	(fixed focus)	L1 (m) = (diagonal screen size in inches) × 0.0080 + 0.0047 L3 (m) = L1-0.146 L4 (m) = L1-0.644
ET-DLE055	(fixed focus)	L (m) = (diagonal screen size in inches) × 0.0171 - 0.0476

Aspect ratio 16:9

ET-DLE085	minimum	L (m) = (diagonal screen size in inches) × 0.0186 - 0.0471
	maximum	L (m) = (diagonal screen size in inches) × 0.0230 - 0.0442
ET-DLE105	minimum	L (m) = (diagonal screen size in inches) × 0.0231 - 0.0511
	maximum	L (m) = (diagonal screen size in inches) × 0.0310 - 0.0472
ET-DLE150	minimum	L (m) = (diagonal screen size in inches) × 0.0305 - 0.0540
	maximum	L (m) = (diagonal screen size in inches) × 0.0439 - 0.0498
Supplied lens	*minimum*	***L (m) = (diagonal screen size in inches) × 0.0403 - 0.0746***
	maximum	***L (m) = (diagonal screen size in inches) × 0.0563 - 0.0725***
ET-DLE250	minimum	L (m) = (diagonal screen size in inches) × 0.0532 - 0.0800
	maximum	L (m) = (diagonal screen size in inches) × 0.0840 - 0.0792
ET-DLE350	minimum	L (m) = (diagonal screen size in inches) × 0.0839 - 0.1351
	maximum	L (m) = (diagonal screen size in inches) × 0.1267 - 0.1346
ET-DLE450	minimum	L (m) = (diagonal screen size in inches) × 0.1270 - 0.3017
	maximum	L (m) = (diagonal screen size in inches) × 0.2007 - 0.2991
ET-DLE030	(fixed focus)	L1 (m) = (diagonal screen size in inches) × 0.0087 + 0.0047 L3 (m) = L1-0.146 L4 (m) = L1-0.644
ET-DLE055	(fixed focus)	L (m) = (diagonal screen size in inches) × 0.0186 - 0.0476

- **Distances calculated with the above equations will include a slight error.**

Formula for calculating possible heights when using the ET-DLE030

If using a screen size which has not been previously mentioned, use the following calculation formulas to obtain the possible setting-up height.

For screen aspect ratio of 4:3	Possible setting-up height A1 (mm) = Projection screen size (inches) x 4.8-66.5 Possible setting-up height A2 (mm) = A1 + 175
For screen aspect ratio of 16:9	Possible setting-up height A1 (mm) = Projection screen size (inches) x 7.3-66.5 Possible setting-up height A2 (mm) = A1 + 175

* There may be a small margin of error in the values obtained from the above formulas.

Formula for calculating possible heights when using the ET-DLE030

If using a screen size which has not been previously mentioned, use the following calculation formulas to obtain the possible setting-up height.

For screen aspect ratio of 16:10
Possible setting-up height A1 (mm) = Projection screen size (inches) x 5.0-72.1
Possible setting-up height A2 (mm) = A1 + 200

For screen aspect ratio of 16:9
Possible setting-up height A1 (mm) = Projection screen size (inches) x 5.9-72.1
Possible setting-up height A2 (mm) = A1 + 200

For screen aspect ratio of 4:3
Possible setting-up height A1 (mm) = Projection screen size (inches) x 5.7-72.1
Possible setting-up height A2 (mm) = A1 + 200

* There may be a small margin of error in the values obtained from the above formulas.

Shift range

Optical axis shift function allows to shift the position of a projected image as shown below.

- **Floor mount**
  (When the lens except the ET-DLE085 and ET-DLE105 is mounted.)

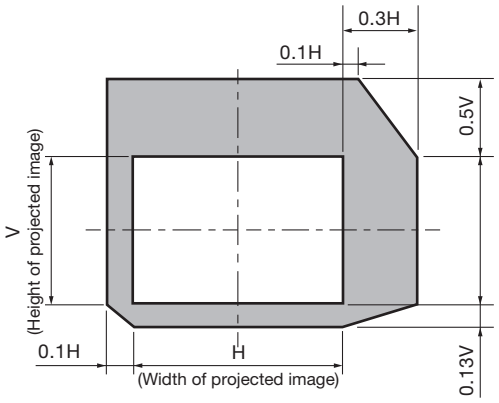

- **Ceiling mount**
  (When the lens except the ET-DLE085 and ET-DLE105 is mounted.)

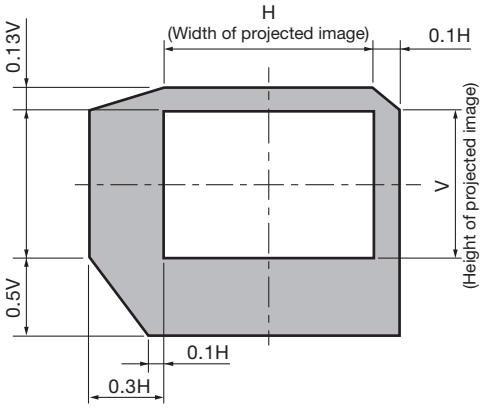

- **Floor mount**
  (When the ET-DLE085 and ET-DLE105 is mounted.)

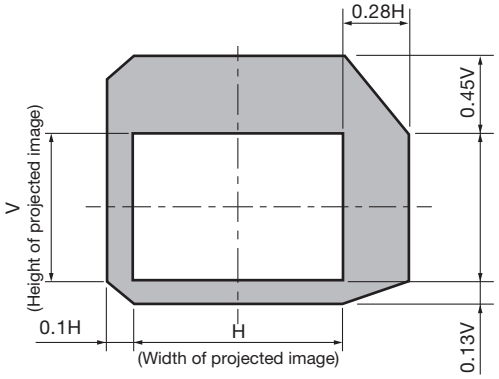

- **Ceiling mount**
  (When the ET-DLE085 and ET-DLE105 is mounted.)

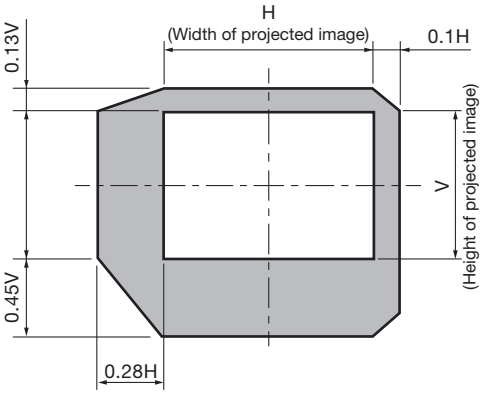

- **The ET-DLE055 has a fixed short-focus lens. Therefore, the lens shift function provided in the main unit cannot be used.**

Installable angle

Install the projector at an angle within the range shown below.

• Vertical direction

The projector may be installed at a vertical angle of 360°.

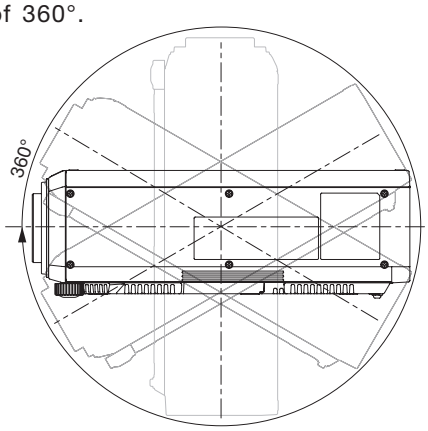

• Horizontal direction

The projector may be installed at a horizontal angle of ±15°.

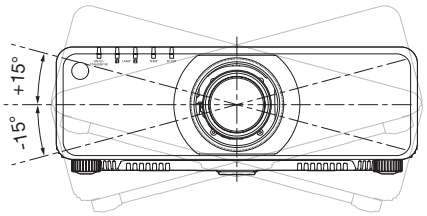

• Downward-facing installation

When installing the projector in a downward facing position, be sure to attach the supplied clasp to the lamp unit. Using the projector without attach the clasp may shorten the life of the lamp.

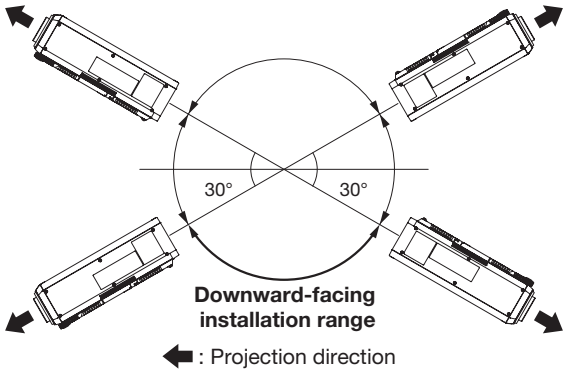

List of compatible signals

The signals that can be input to this projector are shown in the table below. Horizontal scanning frequencies of 15 kHz to 100 kHz, vertical scanning frequencies of 24 Hz to 120 Hz, and a dot clock of 162 MHz maximum can be input.

NOTE: The native resolution of this projector is 1,920 × 1,200 pixels. If the display resolution of the input signal is different from the native resolution, image compression or expansion will be used to convert the input signal to a level within the native resolution.

Display mode	Display resolution (dots)	Scanning frequency H (kHz)	Scanning frequency V (kHz)	Dot clock frequency (MHz)	Format
NTSC/NTSC4.43/PAL-M/PAL60	720 × 480i	15.7	59.9	–	VIDEO/YC
PAL/PAL-N/SECAM	720 × 576i	15.6	50.0		
525i (480i)	720 × 480i	15.7	59.9	13.5	RGB1/RGB2
625i (576i)	720 × 576i	15.6	50.0		
525i (480i)	720(1440) × 480i*1	15.7	59.9	27.0	HDMI/DVI-D
625i (576i)	720(1440) × 576i*1	15.6	50.0		
525p (480p)	720 × 483	31.5	59.9		RGB1/RGB2/HDMI/DVI-D
625p (576p)	720 × 576	31.3	50.0		
750 (720)/60p	1280 × 720	45.0	60.0	74.3	RGB1/RGB2/HDMI/DVI-D
750 (720)/50p		37.5	50.0		
1125 (1080)/60i*2	1920 × 1080i	33.8	60.0		
1125 (1080)/50i		28.1	50.0		
1125 (1080)/24p	1920 × 1080	27.0	24.0		
1125 (1080)/24sF	1920 × 1080i	27.0	48.0		
1125 (1080)/25p	1920 × 1080	28.1	25.0		
1125 (1080)/30p		33.8	30.0		
1125 (1080)/60p		67.5	60.0	148.5	
1125 (1080)/50p		56.3	50.0		
VESA400	640 × 400	31.5	70.1	25.2	RGB1/RGB2/HDMI/DVI-D
		37.9	85.1	31.5	
VGA480	640 × 480	31.5	59.9	25.2	
		35.0	66.7	30.2	
		37.9	72.8	31.5	
		37.5	75.0	31.5	
		43.3	85.0	36.0	
SVGA	800 × 600	35.2	56.3	36.0	
		37.9	60.3	40.0	
		48.1	72.2	50.0	
		46.9	75.0	49.5	
		53.7	85.1	56.3	
MAC16	832 × 624	49.7	74.6	57.3	
XGA	1024 × 768	39.6	50.0	51.9	
		48.4	60.0	65.0	
		56.5	70.1	75.0	
		60.0	75.0	78.8	
		65.5	81.6	86.0	
		68.7	85.0	94.5	
		81.4	100.0	113.3	
		98.8	120.0	139.1	
MXGA	1152 × 864	53.7	60.0	81.6	
		64.0	70.0	94.2	
		67.5	74.9	108.0	
		77.1	85.0	119.7	
MAC21	1152 × 870	68.7	75.1	100.0	
1280 × 720	1280 × 720	37.1	49.8	60.5	
		44.8	59.9	74.5	
		76.3	100.0	131.8	
		92.6	120.0	161.6	
1280 × 768	1280 × 768	39.6	49.9	65.3	
		47.8	59.9	79.5	
	1280 × 768*3	47.4	60.0	68.3	
	1280 × 768	60.3	74.9	102.3	
		68.6	84.8	117.5	

Display mode	Display resolution (dots)	Scanning frequency H (kHz)	Scanning frequency V (kHz)	Dot clock frequency (MHz)	Format
1280 × 800	1280 × 800	41.3	50.0	68.0	RGB1/RGB2/ HDMI/DVI-D
		49.7	59.8	83.5	
	1280 × 800*3	49.3	59.9	71.0	
	1280 × 800	62.8	74.9	106.5	
		71.6	84.9	122.5	
MSXGA	1280 × 960	60.0	60.0	108.0	
SXGA	1280 × 1024	52.4	50.0	88.0	
		64.0	60.0	108.0	
		72.3	66.3	125.0	
		78.2	72.0	135.1	
		80.0	75.0	135.0	
		91.1	85.0	157.5	
1366×768	1366 × 768	47.7	59.8	85.5	
		39.6	49.9	69.0	
SXGA+	1400 × 1050	54.1	50.0	99.9	
		64.0	60.0	108.0	
		65.2		122.6	
		65.3		121.8	
		78.8	72.0	149.3	
		82.2	75.0	155.9	
WXGA+	1440 × 900	55.9	59.9	106.5	
		46.3	49.9	86.8	
1600×900	1600 × 900	46.4		96.5	
		55.9	60.0	119.0	
UXGA	1600 × 1200	61.8	49.9	131.5	
		75.0	60.0	162.0	
WSXGA+	1680 × 1050	65.3	60.0	146.3	
		54.1	50.0	119.5	
1920×1080	1920 × 1080	55.6	49.9	141.5	
	1920 × 1080*3	66.6	59.9	138.5	
	1920 × 1080*4	67.2	60.0	173.0	RGB1/RGB2
WUXGA	1920 × 1200	61.8	49.9	158.3	RGB1/RGB2/ HDMI/DVI-D
	1920 × 1200*3	74.0	60.0	154.0	
	1920 × 1200*4	74.6	59.9	193.3	RGB1/RGB2

***1 Only compatible with dot clock frequency of 27 MHz (pixel repetition signal)**
***2 When 1125(1035)/60i signal input, it displays as 1125(1080)/60i signals.**
***3 Compliant with VESA CVT-RB (Coordinated Video Timing-Reduced Blanking).**
***4 Image resolution is reduced by the image processing circuit before projection.**

NOTE: DIGITAL LINK and HDMI inputs share the same compatible signal.