Panasonic ideas for life

SPEC FILE

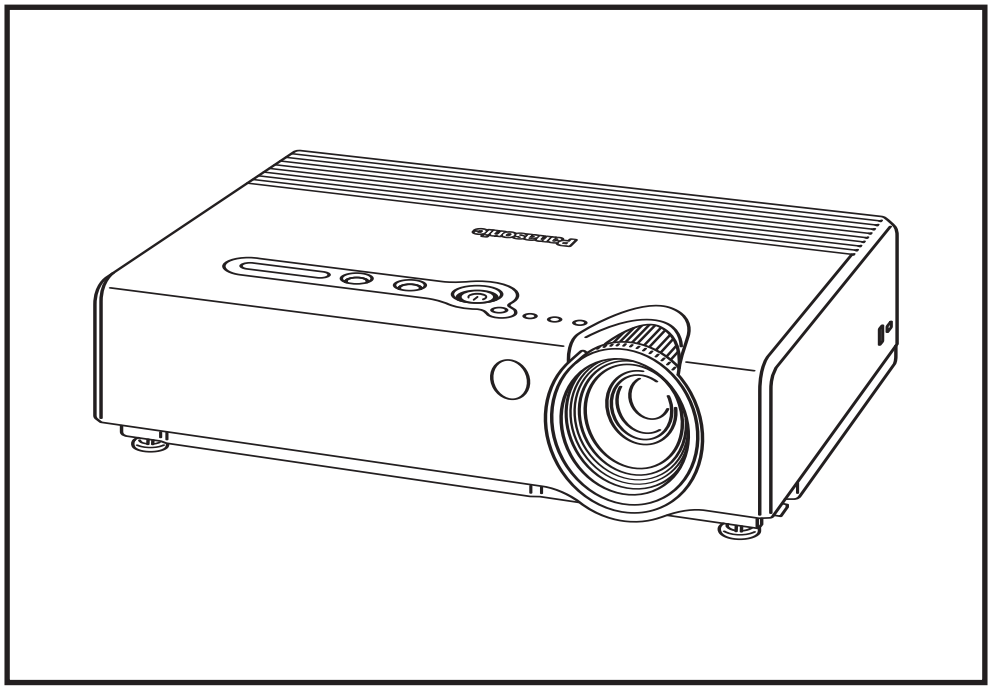

Product Number : PT-**LB55NT**

Product Name : Micro-Portable Wireless LCD Projector

Micro-Portable Wireless LCD Projector

PT-LB55NT

Specifications

Power supply		100–240 V AC, 50/60 Hz
Power consumption		300 W (approx. 3 W in standby mode with fan stopped)
Optical system		Dichroic mirror separation/prism synthesis system
LCD panel	Panel size	0.7″ (17.78 mm) diagonal, micro lens array (4:3 aspect ratio)
	Display method	Transparent LCD panel (x 3, R/G/B)
	Drive method	Active matrix
	Pixels	786,432 (1,024 x 768) x 3, total of 2,359,296 pixels
	Pixel configuration	Stripe
Lens		Manual zoom (1:1–1:1.2), manual focus
		F 1.7–1.8, f 24.0–28.8 mm
Lamp		220 W UHM™ lamp
Colors		Full color (16,777,216 colors)
Brightness		2,500 lumens
Center-to-corner uniformity ratio		90%
Contrast ratio		400:1*1 (full on/full off)
Scanning frequency	RGB	Horizontal: 15–91 kHz, Vertical: 50–85 Hz
	YP_BP_R	480i (525i): f_H 15.75 kHz; f_V 60 Hz
		576i (625i): f_H 15.63 kHz; f_V 50 Hz
		480p (525p): f_H 31.5 kHz; f_V 60 Hz
		576p (625p): f_H 31.25 kHz; f_V 50 Hz
		720p (750p): f_H 45 kHz; f_V 60 Hz
		1080i (1125i): f_H 33.75 kHz; f_V 60 Hz
		1080i (1125i): f_H 28.125 kHz; f_V 50 Hz
	S-Video/Video	NTSC, NTSC4.43, PAL-M, PAL60: f_H 15.75 kHz; f_V 60 Hz
		PAL, SECAM, PAL-N: f_H 15.63 kHz; f_V 50 Hz
Projection size		838–7,620 mm (33–300 inches) diagonally, 4:3 aspect ratio
Throw distance		1.2 m–12.0 m (3′11″–39′4″)
Optical axis shift		9:1 (fixed)
Keystone correction range		Vertical: approx. ±30°
On-screen menu		17 languages: English, French, German, Spanish, Italian, Korean, Russian, Chinese, Japanese, Swedish, Norwegian, Danish, Portuguese, Polish, Hungarian, Czech, and Thai
Installation		Front/rear, ceiling/desk (menu selection)
Built-in speakers	Size	4 x 3 cm x 1, oval
	Output power	1.0 W (monaural)
Terminals	PC 1 IN (RGB 1 IN)	D-sub HD 15-pin x 1
	RGB signal	R, G, B: 0.7 Vp-p, 75 Ω, Sync on green: 1.0 V [p-p], 75 Ω, HD/SYNC, VD: TTL (positive/negative polarity compatible)
	YP_BP_R signal	Y: 1.0 V [p-p] (including sync signal), 75 Ω, P_B, P_R: 0.7 Vp-p, 75 Ω
	PC 2 IN/PC 1 OUT (RGB 2 IN/RGB 1 OUT)	
		D-sub HD 15-pin x 1 (input/output selectable using on-screen menu)
	RGB signal	R, G, B: 0.7 V [p-p], 75 Ω, Sync on green: 1.0 V [p-p], 75 Ω, HD/SYNC, VD: TTL (positive/negative polarity compatible)
	YP_BP_R signal	Y: 1.0 V [p-p] (including sync signal), 75 Ω, P_B, P_R: 0.7 V [p-p], 75 Ω
	VIDEO IN	RCA pin x 1, 1.0 Vp-p, 75 Ω
	S-VIDEO IN	Mini DIN 4-pin x 1, Y: 1.0 V [p-p], C: 0.286 V [p-p], 75 Ω
	PC 1 (RGB 1) AUDIO IN	M3 (L, R) x 1, 0.5 V [rms]
	PC 2 (RGB 2) AUDIO IN	M3 (L, R) x 1, 0.5 V [rms]
	AUDIO IN	RCA (L, R) x 1, 0.5 V [rms], for VIDEO and S-VIDEO
	AUDIO OUT	M3 (L, R) x 1, 0–2.0 V [rms] (variable)
	SERIAL	Mini DIN 8-pin x 1, for external control (RS-232C)
Power cord length		2 m/6.6′
Cabinet material		Moulded plastic (ABS/PC)
Dimensions (W x H x D)		327 x 75 x 233 mm (12-27/32″ x 2-15/16″ x 9-5/32″)
Weight		2.6 kg (5.7 lbs.)

Operating environment	Temperature	0°–40°C (32°–104°F)
	Humidity	20%–80% (no condensation)
Remote control unit	Power supply	3 V DC (AAA battery x 2)
	Operation range*3	Approx. 7 m when operated from directly in front of the signal receptor
	Dimensions (W x H x D)	52 x 123 x 21 mm (2-1/32″ x 4-27/32″ x 27/32″)
	Weight	74 g (2.6 ozs.) (including batteries)
Wireless LAN	Standard	IEEE 802.11b/g (ARIB STD-T66)
	Modulation	
	IEEE 802.11b	Direct sequence spread spectrum (DS-SS) system
	IEEE 802.11g	Orthogonal frequency division multiplex (OFDM) system
	Transmission system	
	IEEE 802.11b	CCK (11/5.5 Mbps), DQPSK (2 Mbps), DBPSK (1 Mbps)
	IEEE 802.11g	64-QAM (54/48 Mbps), 16-QAM (36/24 Mbps), QPSK (18/12 Mbps), BPSK (9/6 Mbps)
	Transmission speed	
	IEEE 802.11b	11 Mbps, 5.5 Mbps, 2 Mbps, 1 Mbps
	IEEE 802.11g	54 Mbps, 48 Mbps, 36 Mbps, 24 Mbps, 18 Mbps, 12 Mbps, 9 Mbps, 6 Mbps
	Operating range*2	Approx. 30 m
	Frequency range	PT-LB55NTE/LB55NTEA: 2,412 MHz–2,484 MHz PT-LB55NTU: 2,412 MHz–2,462 MHz
	Channels	PT-LB55NTE/LB55NTEA: 1–13 ch PT-LB55NTU: 1–11 ch

Supplied accessories

Power cord
Wireless remote control
Batteries for remote control
VGA cable
Lens cover
Carrying bag

Optional accessories

Replacement lamp unit: ET-LAB30
Ceiling mount bracket: ET-PKB30
Full-function wireless remote control: ET-RM300
Serial adapter (DIN 8-pin/D-sub 9-pin): ET-ADSER

***1: In AI mode.**

***2: Operation range differs depending on environments.**

Weights and dimensions shown are approximate.

Specifications subject to change without notice.

To use wireless functions, a PC is required that meets the conditions given below:

OS:	Microsoft® Windows® 2000 Professional, Windows® XP Professional, Windows® XP Home Edition
CPU:	Pentium® III or higher, or other compatible processor (1 GHz or higher is recommended).
Memory:	256 MB or more
Free hard disk space:	60 MB or more
CD-ROM drive:	CD-ROM drive or DVD drive
Wireless LAN:	IEEE 802.11b/g compatible (built-in wireless LAN system or external IEEE 802.11b/g LAN card must be installed and running normally.) However, some IEEE 802.11g/b wireless LAN may not allow connection to the projector.
Web browser:	Internet Explorer 6.0 or later, Netscape Communicator 7.0 or later
Direct X:	DirectX® 8.1b or later must be installed.

Micro-Portable Wireless LCD Projector

PT-LB55NT

Dimensions

unit : mm (inch)
NOTE: This illustration is not drawn to scale.

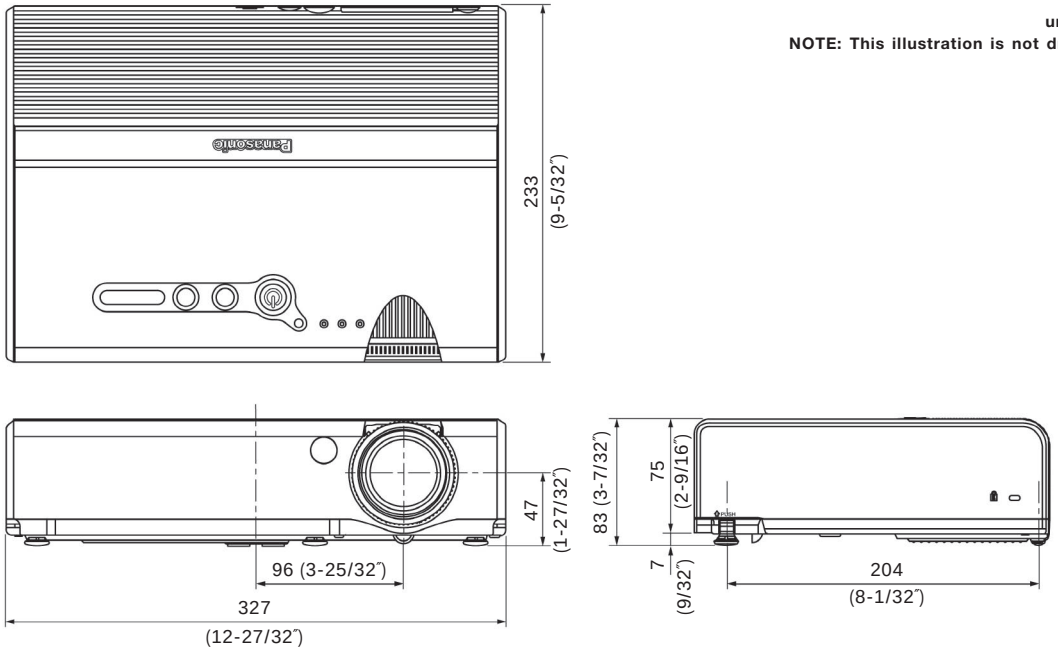

Terminals

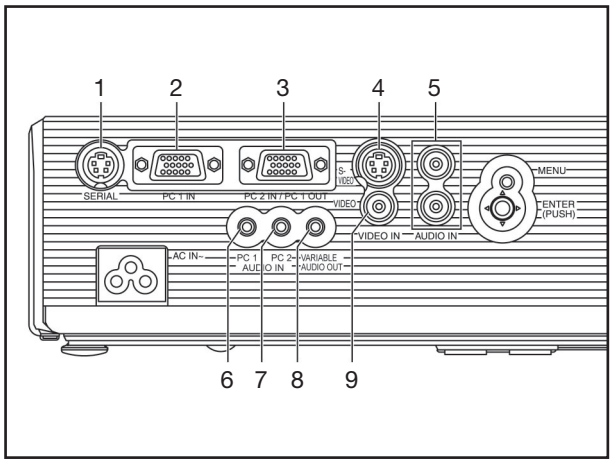

1 Serial
2 PC 1 (RGB 1) input
3 PC 2 (RGB 2) input/PC 1 (RGB 1) output
4 S-Video input
5 Audio input for S-Video/Video
6 Audio input for PC 1 (RGB 1)
7 Audio input for PC 2 (RGB 2)
8 Audio output
9 Video input

RGB IN connector pin assignment

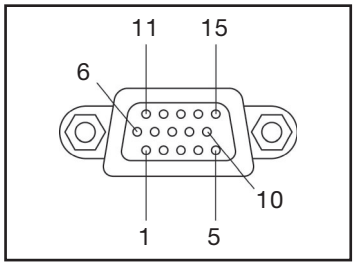

D-sub HD 15-pin, female

no.	signal	no.	signal	no.	signal
1	R/P_R	6	GND	11	GND
2	G/Y	7	GND	12	SDA*
3	B/P_B	8	GND	13	HD/SYNC
4	NC	9	NC	14	VD
5	GND	10	GND	15	SCL*

* Effective when connected to a PC having proper functions.

Standard setting-up positions

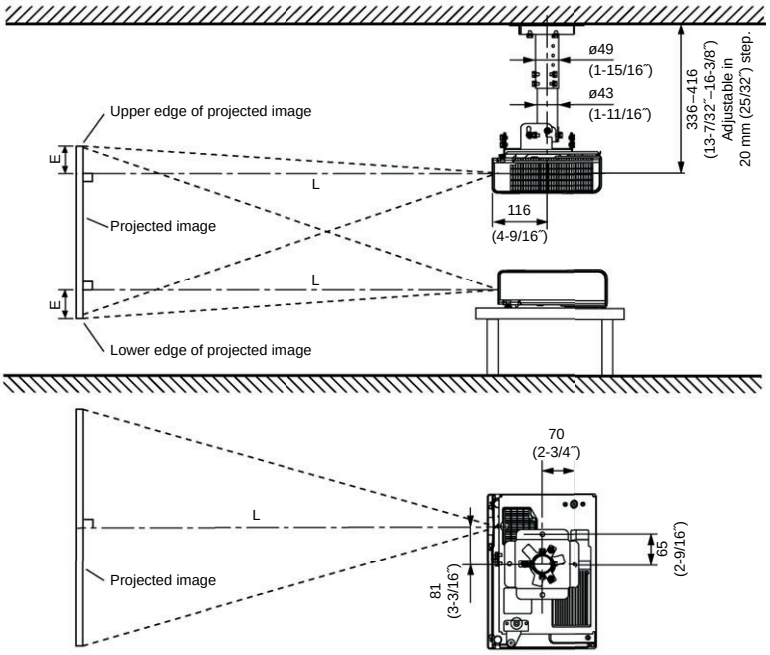

unit : mm (inch)

A: Distance to screen
E: Height from the edge of screen to center of lens

NOTE:

Illustrations show the projector installed using optional ceiling bracket.

This illustration is not drawn to scale.

Diagonal image size (4:3 aspect ratio)	Distance to screen (L) min.	recommended*	max.	Height from the edge of screen to center of lens
33˝/ 0.84 m / 2.7´	–	–	1.2 m / 3.9´	5 cm / 2.0˝
40˝/ 1.02 m / 3.3´	1.4 m / 4.6´	1.5 m / 4.9´	1.5 m / 4.9´	6 cm / 2.4˝
50˝/ 1.27 m / 4.2´	1.7 m / 5.6´	1.9 m / 6.2´	1.9 m / 6.2´	7 cm / 2.8˝
60˝/ 1.52 m / 4.9´	2.0 m / 6.6´	2.3 m / 7.5´	2.3 m / 7.5´	9 cm / 3.5˝
70˝/ 1.78 m / 5.8´	2.4 m / 7.9´	2.7 m / 8.9´	2.7 m / 8.9´	10 cm / 3.9˝
80˝/ 2.03 m / 6.7´	2.7 m / 8.9´	3.1 m / 10.2´	3.1 m / 10.2´	12 cm / 4.7˝
90˝/ 2.29 m / 7.5´	3.0 m / 9.8´	3.5 m / 11.5´	3.5 m / 11.5´	13 cm / 5.1˝
100˝/ 2.54 m / 8.3´	3.4 m / 11.2´	4.0 m / 13.1´	4.0 m / 13.1´	15 cm / 5.9˝
120˝/ 3.05 m / 10.0´	4.1 m / 13.5´	4.8 m / 15.7´	4.8 m / 15.7´	18 cm / 7.1˝
150˝/ 3.81 m / 12.5´	5.1 m / 16.7´	6.0 m / 19.7´	6.0 m / 19.7´	22 cm / 8.7˝
200˝/ 5.08 m / 16.7´	6.8 m / 22.3´	8.0 m / 26.2´	8.0 m / 26.2´	30 cm / 11.8˝
250˝/ 6.35 m / 20.8´	8.4 m / 27.6´	10.0 m / 32.8´	10.0 m / 32.8´	37 cm / 14.6˝
300˝/ 7.62 m / 25.0´	10.1 m / 33.1´	12.0 m / 39.4´	12.0 m / 39.4´	44 cm / 17.3˝

* This distance is especially recommended for ceiling-mounted use and other permanent installations.

NOTE:

Values shown are approximate.

The value for L (distance to screen) varies slightly depending on the zoom lens characteristics.

When the shortest projection distance is used, a small amount of distortion may occur in the image due to the zoom lens characteristics.

Calculation of the projection distance

For a screen size different from the above, use the equation below to calculate the projection distance.

Aspect ratio 4 : 3
- minimum L (m) = (diagonal screen size in inches) x 0.0337 - 0.044
- maximum L (m) = (diagonal screen size in inches) x 0.0405 - 0.044

Aspect ratio 16 : 9
- minimum L (m) = (diagonal screen size in inches) x 0.0369 - 0.044
- maximum L (m) = (diagonal screen size in inches) x 0.0443 - 0.044

Computer data compatibility

This projector accepts up to 91 kHz horizontal scanning frequency and 162 MHz dot clock.

NOTE: The projector is not fully compatible with RGB signals of which dot clock is higher than 100 MHz.
The display resolution of this projector is 1024 x 768 pixels. If the display resolution indicated in the above data does not match this resolution, the input signal will be converted to 1024 x 768 pixels.