# Philips ProScreen 3500



| | |
|---|---|
| Brief Introduction<br>Beta 2.5 | The Philips ProScreen 3500 model is an LCD projector with VGA 640 x 480 resolution and a contrast of 100:1. The lamp in the projector is specified with a lamp life of 6000 hours, which is over 8.2 years with a daily viewing time of 2 hours. 400 Ansi lumens ensure that a picture width of 174 cm is also possible. However, if room light is available, the picture should be a maximum of 116 cm wide. This model is no longer offered by Philips. |
| Display Type | LCD TFT Panel<br>VGA 4/3 Liquid Crystal Display |

| Projector | | Screen | |
|---|---|---|---|
| Ansi-Lumen | 400 | | 129 Lux (bei 203 cm Screen) |
| Contrast | 100:1 full on/off | | 100:1 full on/off |
| Black Level | 4,0000 min. Lumen | | 1.33 min. Lumen |
| Offset | - | | |

| | |
|---|---|
| Resolution | VGA 640 x 480<br>307.200 Pixel |
| Video Modes | NTSC, PAL, SECAM |
| Application | Stationary \| Permanent installation in the training room and meeting room as well as the conference room.<br>Very narrow picture width and rooms with very little light. |
| Light Source | 100W UHP Lamp<br>Articel Nr.: LCA 3101 |
| Light Life | 6000 h. |
| Operating Costs | 0,3% / 0,01 € |
| Focus | Manual |
| Zoom | Manual |
| Objective | - |
| Throw Ratio | - |
| Audio | - |
| Connections | S-Video: (1) Mini DIN 4-pin<br>Video: (1) RCA jack<br>D-sub 15pin in |
| Ceiling Mounting | - |
| Power | - |
| Size WxHxD | - |
| Operating Noise | - |

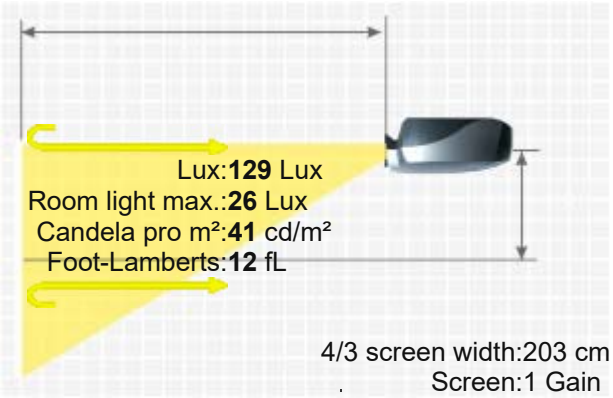


| | |
|---|---|
| Weight | - |
| Keystone | - |
| Illumination | - |
| Frequenz | - |
| Foot-Lamberts | 12 fL / max. 174 cm screen width<br>41 cd/m² |
| Features | - |

Optional

| | |
|---|---|
| Osram bulb only | NLMP2867 |
| Lamp original | LCA3101 |
| Universal Remote original | Fernb-uni-V3 |

PHILIPS PROSCREEN 3500

Order here: https://www.hcinema.de/lampen/shop-en.php?id=n2831
Status - Discontinued (EOL) // Last update of the data: 2023-08-04
Data

More Details

HCinema
https://www.projector-database.com/pro/philipsproscreen3500-en.html

Due to our ongoing commitment to continuously improve the quality of our projector database, this brochure is also subject to change without notice. HCinema is not responsible for any errors or omissions contained in product descriptions.