Provox DPV215



Brief Introduction Beta 2.5	The Provox DPV215 LCD projector has 2500 Ansi lumens, a contrast of 2200:1 and an XGA 1024 x 768 resolution. An image width of up to 435 cm is possible as the projector has 2500 Ansi lumens. However, if room light is available, the picture should be max. 290 cm wide. It is no longer offered by the manufacturer Provox.
Display Type	LCD TFT Panel XGA 4/3 Liquid Crystal Display
Projector Ansi-Lumen	2500
Contrast	2200:1 full on/off
Black Level	1,1364 min. Lumen
Offset	-
Screen Ansi-Lumen	833 Lux (bei 200 cm Screen)
Contrast	2200:1 full on/off
Black Level	0,379 min. Lumen
Resolution	XGA 1024 x 768 786.432 Pixel SXGA 1280 x 1024 compressed
Video Modes	PAL, SECAM, NTSC, HDTV 720p, 1080i, EDTV 480p, 576p
Application	Standard-Portabel | External training and company presentations, as well as product presentations. Medium screen width or rooms with little light, max. 100 lumens.
Light Source	-
Light Life	3000 h.
Operating Costs	-
Focus	Manual
Zoom	Manual 1,21
Objective	F=2,8-3,1
Throw Ratio	-
Audio	-
Connections	DVI-I in S-Video in Cinch Video in
Ceiling Mounting	-
Power	-
Size WxHxD	242 x 86 x 187 mm (9,5"x3,4"x7,4") 3,89 L/dm³
Operating Noise	35dB
Weight	-
Keystone	-
Illumination	-
Frequenz	H-sync: 15-82 kHz V-sync: 50-85 Hz
Foot-Lamberts	77 fL / max. 435 cm screen width 264 cd/m²
Features	-
Status	- Discontinued (EOL) // Last update of the data: 2023-08-04
Data	

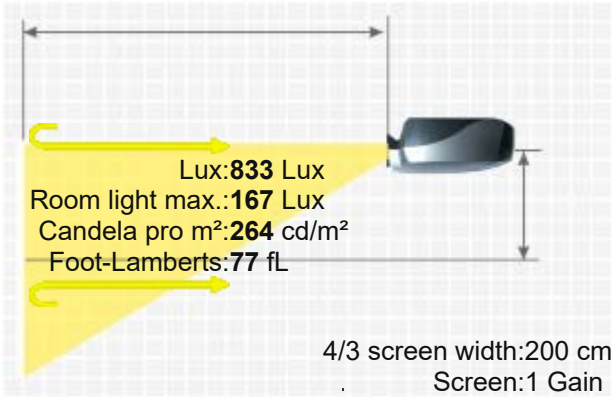

PROVOX DPV215

More Details

HCinema

https://www.projector-database.com/pro/provoxdpv215-en.html

Due to our ongoing commitment to continuously improve the quality of our projector database, this brochure is also subject to change without notice. HCinema is not responsible for any errors or omissions contained in product descriptions.