# Proxima DP8300



PROXIMA DP8300

| | |
|---|---|
| Brief Introduction<br>Beta 2.5 | A brief introduction to the Proxima DP8300. The LCD projector has a VGA 640 x 480 resolution and a contrast of 100:1. Due to the brightness of 350 Ansi lumens, a picture width of 163 cm is possible. In room light, the picture should be max. 109 cm wide. It is no longer offered by the manufacturer Proxima. |
| Display Type | 3 x 3,1 LCD TFT Panel<br>VGA 4/3 Liquid Crystal Display |
| Projector: Ansi-Lumen | 350 |
| Projector: Contrast | 100:1 full on/off |
| Projector: Black Level | 3,5000 min. Lumen |
| Screen | 113 Lux (bei 203 cm Screen)<br>100:1 full on/off<br>1.165 min. Lumen |
| Offset | - |
| Resolution | VGA 640 x 480<br>307.200 Pixel |
| Video Modes | PAL, PAL-M, PAL-N, SECAM, NTSC, NTSC 4.43 |
| Application | Stationary \| Permanent installation in the training room and meeting room as well as the conference room.<br>Very narrow picture width and rooms with very little light. |
| Light Source | 180W Metalldampf Lamp<br>Articel Nr.: 160-00062 |
| Light Life | 1000 h. |
| Operating Costs | 5,18% / 0,17 € |
| Focus | - |
| Zoom | - |
| Objective | - |
| Throw Ratio | - |
| Audio | 3W Mono |
| Connections | D-sub 15pin in<br>2 x Cinch Video in<br>2 x Cinch Stereo in 1 x out<br>S-Video in<br>1 x BNC Video in |
| Ceiling Mounting | Yes |
| Power | 300W |
| Size WxHxD | - |
| Operating Noise | - |
| Weight | - |
| Keystone | - |
| Illumination | - |
| Frequenz | H-sync: 15,0-37,8 kHz<br>V-sync: 50-70 Hz |
| Foot-Lamberts | 11 fL / max. 163 cm screen width<br>38 cd/m² |

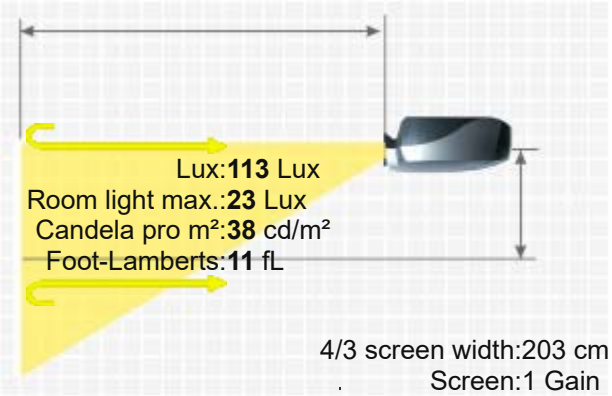

| | | |
|---|---|---|
| Features | - | |
| Optional | Lamp original | 160-00062 |
| | Universal Remote original | Fernb-uni-V3 |

Order here: https://www.hcinema.de/lampen/shop-en.php?id=3135

Status Data - Discontinued (EOL) // Last update of the data: 2023-08-04

More Details

https://www.projector-database.com/pro/proximadp8300-en.html

Due to our ongoing commitment to continuously improve the quality of our projector database, this brochure is also subject to change without notice. HCinema is not responsible for any errors or omissions contained in product descriptions.