Public Soft MP220





Display Type	1 x 0,59" Lcos Panel SVGA 4/3 Liquid Crystal on Silicon (LCOS)		
Ansi-Lumen	Projector 30	Screen	10 Lux (bei 200 cm Screen)
Contrast	-		-
Black Level	-		-
Offset	-		
Resolution	SVGA 800 x 600 480.000 Pixel		
Video Modes	PAL, SECAM, NTSC,		
Application	Game-Portabel | Very portable, small-screen projections. Very narrow picture width and rooms with very little light.		
Light Source	LED		
Light Life	20000 h.		
Operating Costs	0,00 € LED		
Focus	Manual		
Zoom	No Zoom		
Objective	-		
Throw Ratio	-		
Audio	0,5W Mono		
Connections	D-SUB 15 pin in Mini USB Port Micro SD Card Slot		
Ceiling Mounting	-		
Power	15W		
Size WxHxD	61 x 27,9 x 121,9 mm (2,4"x1,1"x4,8") 0,2 L/dm³		
Operating Noise	-		

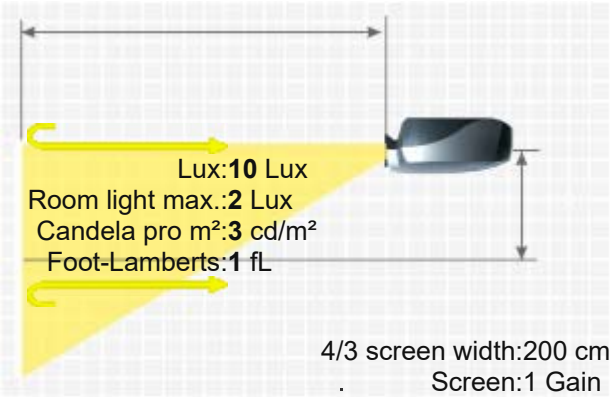

Weight	0,200 kg / 0,44 lbs.
Keystone	-
Illumination	-
Frequenz	-
Foot-Lamberts	1 fL / max. 48 cm screen width 3 cd/m²
Features	-
Status	2010 Discontinued (EOL) // Last update of the data: 2023-08-04
Data	

PUBLIC SOFT MP220

More Details

HCinema

https://www.projector-database.com/pro/publicsoftmp220-en.html

Due to our ongoing commitment to continuously improve the quality of our projector database, this brochure is also subject to change without notice. HCinema is not responsible for any errors or omissions contained in product descriptions.