Pyle PRJAND805



Brief Introduction Beta 2.5	A brief introduction to the Pyle PRJAND805. The game-portable DLP LED projector has a WXGA 1280 x 800 resolution and a contrast of 10000:1. The manufacturer Pyle specifies a service life of 30000 hours, which would be over 20.5 years with a daily viewing time of 4 hours. As Pyle specifies the brightness of the projector in lumens, we have calculated an approximate ansi-lumen value in this case. An image width of up to 86 cm is possible. In room light, however, the image should be smaller. We recommend max. 57 cm. Video signals 1080P and 3D are also no problem for the projector. It was launched in 2014 and is no longer offered by the manufacturer Pyle.
Display Type	 1 x 0,45" DLP Chip WXGA 16/10 Ti Digital Light Processing Chip
Ansi-Lumen	Projector: 72 / 1200 Lumen — Screen: 29 Lux (bei 200 cm Screen)
Contrast	Projector: 10000:1 full on/off — Screen: 10000:1 full on/off
Black Level	Projector: 0,0072 min. Lumen — Screen: 0,003 min. Lumen
Offset	-
Resolution	WXGA 1280 x 800 1.024.000 Pixel
Video Modes	Pal, SECAM, NTSC, HDTV 720p, 1080i, 1080p, 3D, EDTV 480p, 576p
3D Compatibility	Frame-Packing (Full HD 3D) | Frame Sequential (3D Ready)
Application	Game-Portabel | Very portable, small-screen projections. Very narrow picture width and rooms with very little light.
Light Source	LED
Light Life	30000 h.
Operating Costs	0,00 € LED
Focus	Manual
Zoom	No Zoom
Objective	-
Throw Ratio	-
Audio	2 x 1W
Connections	HDMI in D-sub 15pin in Cinch Video in USB in Micro SD
Ceiling Mounting	Yes
Power	-
Size WxHxD	-
Operating Noise	-
Weight	-
Keystone	-
Illumination	-
Frequenz	-

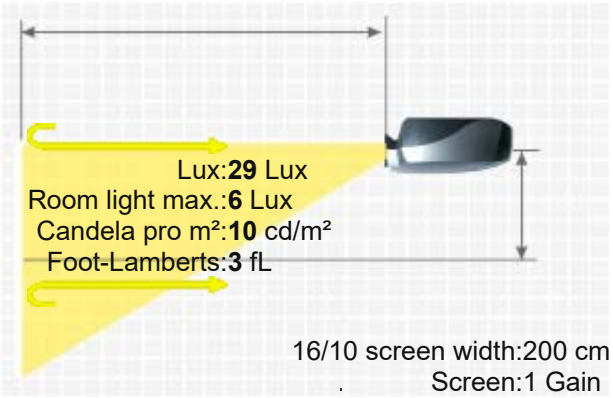

PYLE PRJAND805

Foot-Lamberts	3 fL / max. 86 cm screen width 10 cd/m²
Features	■ Real Full HD 3D ■ Full HD 1080P compatible ■ Micro SD ■ Android 4.0
Status	2014 Discontinued (EOL) // Last update of the data: 2024-10-02
Data	Created: 2014-01-07 13:27:54
More Details	HCinema https://www.projector-database.com/pro/pylePRJAND805-en.html

Due to our ongoing commitment to continuously improve the quality of our projector database, this brochure is also subject to change without notice. HCinema is not responsible for any errors or omissions contained in product descriptions.