Sainyer Y8



SAINYER Y8

Brief Introduction Beta 2.5	The standard portable Y8 LED has 500 Ansi lumens and an HDTV 1920 x 1080 resolution. The service life of the LEDs is 50,000 hours, which is equivalent to 34.2 years at 4 hours per day. Horizontal and vertical keystone correction makes image adjustment childs play. An image width of up to 227 cm is possible as the projector has 500 Ansi lumens. However, if there is room light, the picture should be max. 151 cm wide. The model recognizes DLNA, Airplay, Miracast Screen Mirroring signals, so it is possible to play videos with high resolution and surround sound directly via WLAN from a smartphone, tablet or PC (Android, Windows and iOS). Another extra is that the projector can be connected to external wireless speakers using the Bluetooth function. Furthermore, the projector can play 1080P and 4K (compressed) without any problems.
Display Type	1 x LCD Panel HDTV 16/9 Liquid Crystal Display
Ansi-Lumen	Projector: 500 / Screen: 222 Lux (bei 200 cm Screen)
Contrast	Projector: - / Screen: -
Black Level	Projector: - / Screen: -
Offset	-
Resolution	HDTV 1920 x 1080 2.073.600 Pixel UHD (4K2K) 3840 x 2160 compressed
Video Modes	Pal, SECAM, NTSC, HDTV 720p, 1080i, 1080p, 4K UHD (komprimiert), EDTV 480p, 576p
Application	Standard-Portabel | External training and company presentations, as well as product presentations. Very narrow picture width and rooms with very little light.
Light Source	LED
Light Life	50000 h.
Operating Costs	0,00 € LED
Focus	Manual
Zoom	No Zoom Digital Zoom
Objective	-
Throw Ratio	-
Audio	-
Connections	HDMI in USB-A in Audio Mini Jack out Bluetooth 5.0

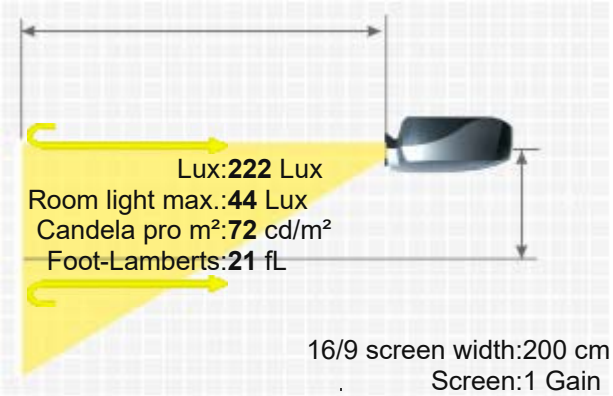

Ceiling Mounting	-
Power	-
Size WxHxD	329 x 146 x 276 mm (13"x5,7"x10,9") 13,26 L/dm³
Operating Noise	-
Weight	2,46 kg / 4,41 lbs.
Keystone	Vert.: +/-45° Hori.: +/-45°
Illumination	-
Frequenz	-
Foot-Lamberts	21 fL / max. 227 cm screen width 72 cd/m²
Features	■ Full HD 1080P compatible ■ Wi-Fi network compatible. ■ Android 12.0

Optionaler Zubehör

Status	2023 Current model // Last update of the data: 2025-01-13 Created: 2024-01-22 09:54:28
Data	
More Details	HCinema https://www.projector-database.com/pro/sainyery8-en.html

Due to our ongoing commitment to continuously improve the quality of our projector database, this brochure is also subject to change without notice. HCinema is not responsible for any errors or omissions contained in product descriptions.