TAW StealthII



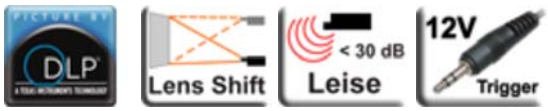

Brief Introduction Beta 2.5	A brief introduction to the TAW StealthII. The DLP projector has an HDTV 1280 x 720 resolution and a contrast of 2500:1. The projector can be positioned very freely using the lens shift function. An image width of up to 296 cm is possible. However, the image should be smaller in room light. We recommend a maximum of 197 cm. At just 28 decibels, the device is one of the quieter projectors. On the market since 2005, the model is no longer offered by the manufacturer TAW.
Display Type	1 x 0,8" HD2+ DLP Chip HDTV 16/9 Ti Digital Light Processing Chip

	Projector	Screen
Ansi-Lumen	850	367 Lux (bei 203 cm Screen)
Contrast	2500:1 full on/off	2500:1 full on/off
Black Level	0,3400 min. Lumen	0.147 min. Lumen

Lens shift	Vert.: +50% -25% motorisch
Resolution	HDTV 1280 x 720 921.600 Pixel SXGA 1280 x 1024 compressed
Video Modes	SECAM, NTSC, HDTV 720p, 1080i,
Disc Recognition	DVD | HD Blu-ray (komprimiert) | ~~3D Blu-ray~~ | ~~4K UHD Blu-ray~~
Application	Homeciname | Small screen width, rooms with very little ambient light below 100 lumens.
Light Source	250W VIP Lamp
Light Life	1500 h.
Operating Costs	-
Focus	Manual
Zoom	Manual 1,34
Objective	F=2,2-2,5 f=24,1-32,3 mm
Throw Ratio	1,34-1,8:1
Audio	-
Connections	1 x D-sub 15pin in 1 x DVI-D mit HDCP 1 x YUV in 1 x Cinch Video in 1 x S-Video in 1 x RS232C 2 x 12V Trigger
Ceiling Mounting	Yes
Power	400W / 10W standby
Size WxHxD	435 x 157 x 374 mm (17,1"x6,2"x14,7") 25,54 L/dm³
Operating Noise	28dB
Weight	12,00 kg / 26,46 lbs.
Keystone	Vert.: +/-15° Hori.: +/-5°
Illumination	90%

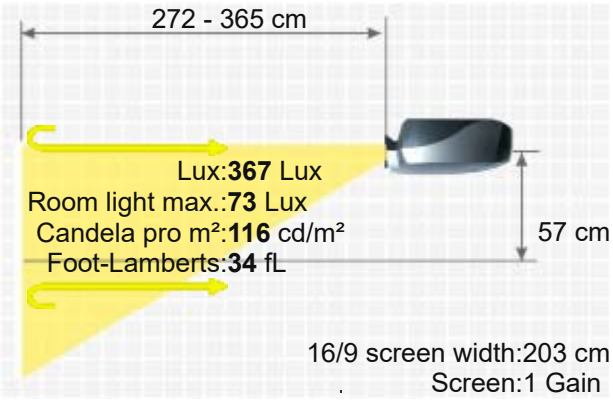



TAW STEALTHII

Frequenz	Range max.: 140 MHz
Foot-Lamberts	34 fL / max. 296 cm screen width
	116 cd/m²
Features	■ Lens shift Funktion motorisch ■ Kensington Slot ■ Digital zoom 16x ■ Casing made of solid aluminium ■ De-interlacer ■ Gold-plated connection sockets
Status Data	2005 Discontinued (EOL) // Last update of the data: 2023-08-04
More Details	https://www.projector-database.com/pro/tawStealthII-en.html



Due to our ongoing commitment to continuously improve the quality of our projector database, this brochure is also subject to change without notice. HCinema is not responsible for any errors or omissions contained in product descriptions.