ThundeaL TD855



THUNDEAL TD855

Brief Introduction Beta 2.5	The TD855 3D LED DLP projector from ThundeaL has 210 Ansi lumens, a contrast of 2000:1 and an HDTV 1280 x 720 resolution. The lifespan of the LEDs is 50,000 hours, which is over 34.2 years if enjoyed for four hours a day. Including an integrated media player with which files can be played directly. As ThundeaL specifies the brightness of the projector in lumens, we have calculated an approximate Ansi lumen value in this case. The projector can illuminate a picture width of up to 147 cm well with its 210 Ansi lumens. In room lighting, however, the picture width should ideally be less than 98 cm. As the projector recognizes screen mirroring signals, it is possible to play videos with a high resolution and surround sound directly from a smartphone, tablet, PC (Android, Windows and iOS) via WLAN. The projector can also play 1080P without any problems.
Display Type	1 x DLP Chip HDTV 16/9 Ti Digital Light Processing Chip
Ansi-Lumen	Projector: 210 / 3500 Lumen — Screen: 93 Lux (bei 200 cm Screen)
Contrast	Projector: 2000:1 full on/off — Screen: 2000:1 full on/off
Black Level	Projector: 0,1050 min. Lumen — Screen: 0,047 min. Lumen
Offset	-
Resolution	HDTV 1280 x 720 921.600 Pixel HDTV 1920 x 1080 compressed
Video Modes	Pal, SECAM, NTSC, HDTV 720p, 1080i, 1080p, EDTV 480p, 576p **Media player formats:** Mediaplayer
3D Compatibility	Side-by-Side | Top-and-Bottom
Application	Micro-Portabel | Small mobile presentations.. Very narrow picture width and rooms with very little light.
Light Source	LED
Light Life	50000 h.
Operating Costs	0,00 € LED
Focus	Manual
Zoom	No Zoom
Objective	-
Throw Ratio	-
Audio	2 x 3W
Connections	HDMI in Mini Jack Audio in und out USB in

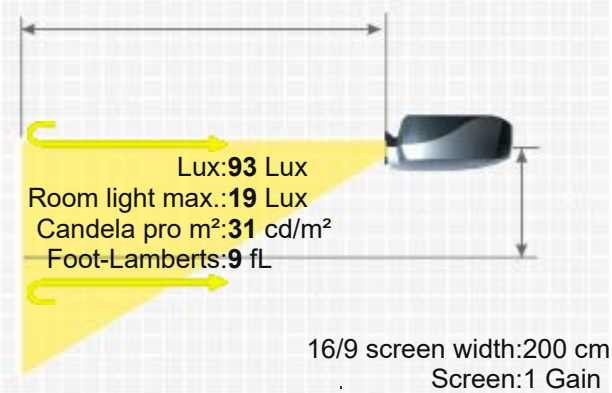

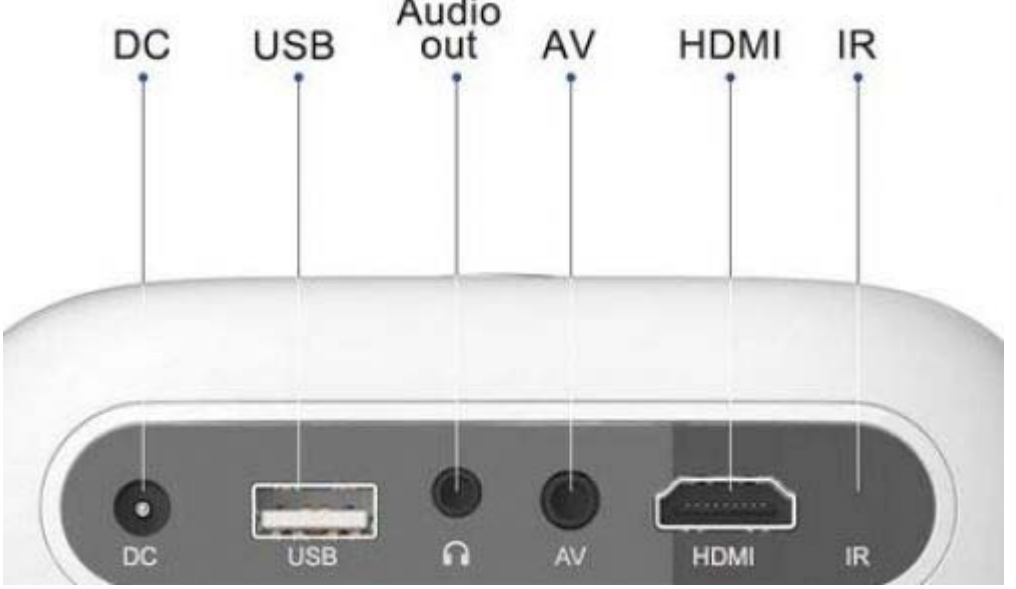

Ceiling Mounting	Yes
Power	-
Size WxHxD	-
Operating Noise	-
Weight	-
Keystone	Vert.: +/-40°
Illumination	-
Frequenz	-
Foot-Lamberts	9 fL / max. 147 cm screen width 31 cd/m²
Features	■ Full HD 1080P compatible ■ Integrated Mediaplayer ■ Wi-Fi network compatible.
Status	2022 Current model // Last update of the data: 2024-06-04
Data	
More Details	HCinema https://www.projector-database.com/pro/thundealtd855-en.html

Due to our ongoing commitment to continuously improve the quality of our projector database, this brochure is also subject to change without notice. HCinema is not responsible for any errors or omissions contained in product descriptions.