Viewsonic X1-4KE Pro



VIEWSONIC X1-4KE PRO

Brief Introduction Beta 2.5	A brief introduction to the Viewsonic X1-4KE Pro. This DLP LED projector has a UHD (4K2K) resolution of 3840 x 2160 and a contrast ratio of 3,500,000:1. It is an LED projector with a lamp life of 60,000 hours, which equates to over 41.1 years at 4 hours? use per day. The projector is equipped with a built-in media player, so playing files directly will be no problem. The built-in lens shift and keystone correction functions offer flexibility when adjusting the projection. 2,500 ANSI lumens ensure that an image width of 508 cm is possible. However, if there is ambient light in the room, the image should be no more than 339 cm wide. Google TV transforms the projector into a smart entertainment centre with countless functions. In addition, thanks to its Bluetooth functionality, the projector can be flexibly paired with other speakers. Playing 1080p, 4K and 3D content is also no problem for the projector, meaning it can recognise all currently available Blu-ray formats.
Display Type	1 x 0,65" DMD DLP Chip HDTV 16/9 Ti Digital Light Processing Chip
Ansi-Lumen	Projector: 2500 / Screen: 1111 Lux (200 cm Screen width)
Contrast	Projector: 3500000:1 full on/off / Screen: 3500000:1 full on/off
Black Level	Projector: 0,0007 min. Lumen / Screen: 0 min. Lumen
Lens shift	Vert.: +65% --55%
Resolution	UHD (4K2K) 3840 x 2160 8.294.400 Pixel / FHD E-Shift
Video Modes	Pal, SECAM, NTSC, HDTV 720p, 1080i, 1080p, 4K UHD, 3D, EDTV 480p, 576p **Media player formats:** doc/docx xls/xlsx ppt/pptx Pdf avi mp4* mov mkv ts vob mpg JPEG/.jpeg bmp png
Disc Recognition	DVD | HD Blu-ray | 3D Blu-ray | 4K UHD Blu-ray (60p)
3D Compatibility	Frame-Packing (Full HD 3D) | Side-by-Side | Top-and-Bottom Frame Sequential (3D Ready)
Application	Homeciname | Gaming | Medium screen width or rooms with little light, max. 100 lumens.
Light Source	3th Gen RGGB LED
Light Life	60000 h.
Operating Costs	0,00 € LED
Focus	Manual
Zoom	Manual x1,3
Objective	F=2,48-2,78 f=16,89-21,87 mm
Throw Ratio	1,15-1,5:1
Audio	2 x 6W Cube

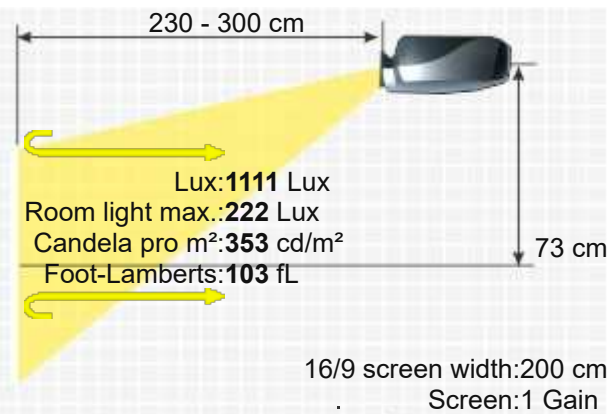

Connections	2x HDMI 2.0 (HDCP2.2, eARC) in USB-A (5V/1A) in USB-C in Mini Jack Audio in und out RS232C DB-9 Pin in Bluetooth 5.0
Ceiling Mounting	Yes, is possible.
Power	236W
Size WxHxD	355 x 121 x 244 mm (14"x4,8"x9,6") 10,48 L/dm³
Operating Noise	33 / 29 dB in Eco Mode
Weight	3,68 kg / 6,61 lbs.
Keystone	Vert.: +/-40° Hori.: +/-40°
Illumination	-
Frequenz	H-sync: 15-135 kHz V-sync: 23-120 Hz
Foot-Lamberts	103 fL / max. 508 cm screen width 353 cd/m²
Features	■ Real Full HD 3D ■ Full HD 1080P compatible ■ Lens shift Funktion ■ Integrated Mediaplayer ■ Eco Mode ■ High Dynamic Range (HDR) ■ 360° installable ■ Password protection ■ Wi-Fi network compatible. ■ Google TV ■ Bluetooth ■ Local storage 16GB (10GB available) ■ Game Mode input latency: 4.2ms ■ Refresh rate: 120Hz @ 1440p
Screen Mirroring	Optional only Chromecast / Fire TV / Apple TV / Mi Box Ads
Please note	Game Ready: Inputlag 4.2ms , 1440p @ 120 Hz
Status	2023 Current model // Last update of the data: 2026-10-05 Created: 2026-09-15 09:18:58



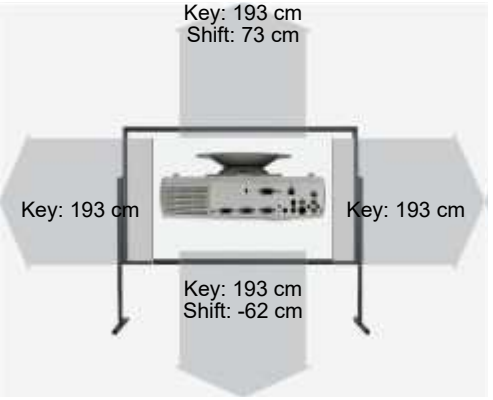

Data



More Details

HCinema

https://www.projector-database.com/pro/viewsonicx14kepro-en.html

Due to our ongoing commitment to continuously improve the quality of our projector database, this brochure is also subject to change without notice. HCinema is not responsible for any errors or omissions contained in product descriptions.