Vinew LS1/ LS1TV



Display Type	1 x 5,0" LCD TFT Panel SVGA 4/3 Liquid Crystal Display		
Projector		Screen	
Ansi-Lumen	-		Lux (bei 200 cm Screen)
Contrast	600:1 full on/off		-
Black Level	-		-
Offset	-		
Resolution	SVGA 800 x 600 480.000 Pixel		
Video Modes	PAL, SECAM, NTSC,		
Application	Standard-Portabel | External training and company presentations, as well as product presentations. Very narrow picture width and rooms with very little light.		
Light Source	150W HID Lamp		
Light Life	8000 h.		
Operating Costs	-		
Focus	Manual		
Zoom	No Zoom		
Objective	f=170mm		
Throw Ratio	1,67:1		
Audio	-		
Connections	D-sub 15 pin in YUV in S-video in Cinch Video in Cinch Stereo in und out		
Ceiling Mounting	-		
Power	220W		
Size WxHxD	250,8 x 102,8 x 316 mm (9,9"x4"x12,4") 8,06 L/dm³		
Operating Noise	-		
Weight	4,90 kg / 10,8 lbs.		
Keystone	Vert.: +/-15°		
Illumination	-		
Frequenz	-		
Foot-Lamberts	-		
	-		
Features	■ TV Tuner		
Status	- Discontinued (EOL) // Last update of the data: 2023-08-04		
Data			

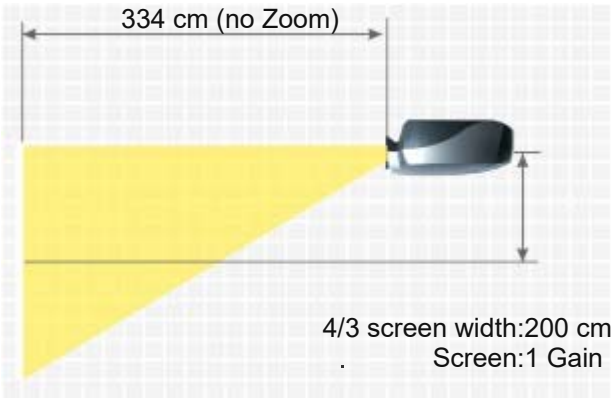

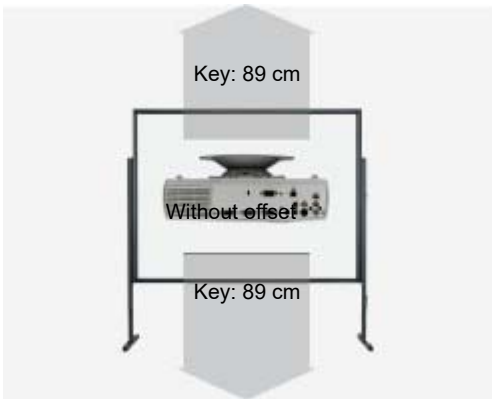

More Details

HCinema

https://www.projector-database.com/pro/vinewls1-en.html

VINEW LS1 / LS1TV

Due to our ongoing commitment to continuously improve the quality of our projector database, this brochure is also subject to change without notice. HCinema is not responsible for any errors or omissions contained in product descriptions.