Vinew VP DS2+



Brief Introduction Beta 2.5	A brief introduction to the Vinew VP DS2+. The standard portable DLP projector has an SVGA 800 x 600 resolution and a contrast of 2000:1. An image width of up to 444 cm is possible. However, the image should be smaller in room light. We recommend max. 296 cm. It is no longer offered by the manufacturer Vinew.
Display Type	1 x DLP Chip SVGA 4/3 Ti Digital Light Processing Chip
Ansi-Lumen	Projector: 2600 / Screen: 867 Lux (bei 200 cm Screen)
Contrast	Projector: 2000:1 full on/off / Screen: 2000:1 full on/off
Black Level	Projector: 1,3000 min. Lumen / Screen: 0,434 min. Lumen
Offset	-
Resolution	SVGA 800 x 600 480.000 Pixel
Video Modes	PAL, SECAM, NTSC, HDTV 720p, 1080i, EDTV 480p, 576p
Application	Standard-Portabel | External training and company presentations, as well as product presentations. Medium screen width or rooms with little light, max. 100 lumens.
Light Source	-
Light Life	-
Operating Costs	-
Focus	Manual
Zoom	Manual
Objective	-
Throw Ratio	-
Audio	-
Connections	-
Ceiling Mounting	-
Power	-
Size WxHxD	-
Operating Noise	-
Weight	-
Keystone	-
Illumination	80%
Frequenz	-
Foot-Lamberts	81 fL / max. 444 cm screen width 278 cd/m²
Features	-
Status	- Discontinued (EOL) // Last update of the data: 2023-08-04
Data	

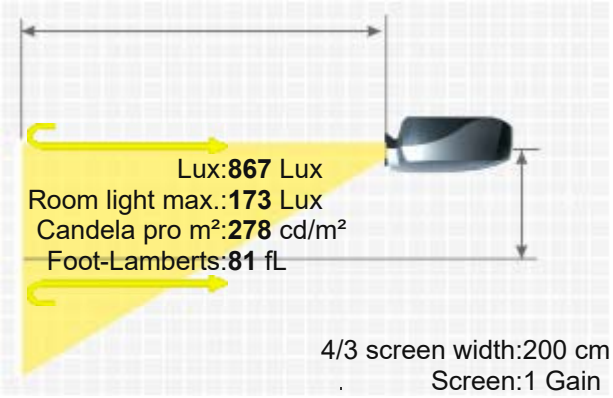

VINEW VP DS2+

More Details

HCinema

https://www.projector-database.com/pro/vinewvpds2plus-en.html

Due to our ongoing commitment to continuously improve the quality of our projector database, this brochure is also subject to change without notice. HCinema is not responsible for any errors or omissions contained in product descriptions.