Wimius P20



WIMIUS P20

Brief Introduction Beta 2.5	The micro-portable Wimius P20 LED LCD projector has 270 Ansi lumens and an HDTV 1920 x 1080 resolution. The manufacturer Wimius specifies a service life of 30,000 hours, which is over 20.5 years with a daily viewing time of 4 hours. Due to the brightness of 270 Ansi lumens, a picture width of 167 cm is possible. In room light, the picture should be max. 111 cm wide. The model recognizes screen mirroring signals, so it is possible to play videos with high resolution and surround sound directly via WLAN from a smartphone, tablet or PC (Android, Windows and iOS). Thanks to the Bluetooth function, the projector can also be flexibly paired with other speakers. Even 1080P video signals are no problem for the projector.
Display Type	3 x LCD TFT Panel HDTV 16/9 Liquid Crystal Display
Ansi-Lumen	Projector: 270 / Screen: 120 Lux (bei 200 cm Screen)
Contrast	Projector: - / Screen: -
Black Level	Projector: - / Screen: -
Offset	-
Resolution	HDTV 1920 x 1080 2.073.600 Pixel
Video Modes	Pal, SECAM, NTSC, HDTV 720p, 1080i, 1080p, EDTV 480p, 576p
Application	Micro-Portabel | Small mobile presentations.. Very narrow picture width and rooms with very little light.
Light Source	LED
Light Life	30000 h.
Operating Costs	0,00 € LED
Focus	Manual
Zoom	No Zoom
Objective	-
Throw Ratio	-
Audio	1 x 5W
Connections	2xHDMI in D-sub 15 Pin in Mini Jack Audio in und out 2x USB in Bluetooth

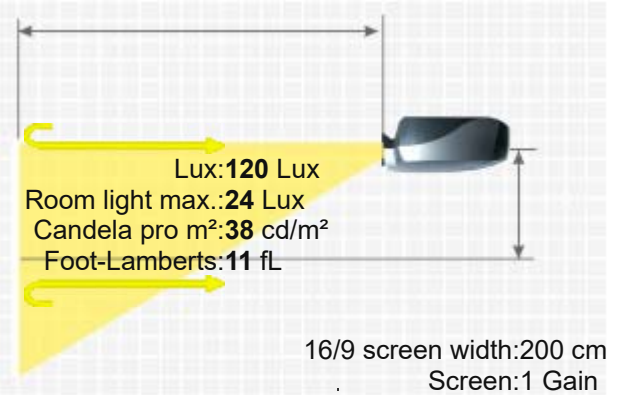



Ceiling Mounting	Yes
Power	-
Size WxHxD	-
Operating Noise	-
Weight	-
Keystone	Vert.: +/-50°
Illumination	-
Frequenz	-
Foot-Lamberts	11 fL / max. 167 cm screen width 38 cd/m²
Features	■ Full HD 1080P compatible ■ Wi-Fi network compatible. -
Status	2022 Current model // Last update of the data: 2024-10-18
Data	
More Details	HCinema https://www.projector-database.com/pro/wimiusp20-en.html

Due to our ongoing commitment to continuously improve the quality of our projector database, this brochure is also subject to change without notice. HCinema is not responsible for any errors or omissions contained in product descriptions.