Zenith DSV 100



DLP | Motor | Pointer

Brief Introduction Beta 2.5	The standard portable DSV 100 DLP has 800 Ansi lumens, a contrast of 180:1 / 450:1 and an SVGA 800 x 600 resolution. An image width of up to 246 cm is possible as the projector has 800 Ansi lumens. However, if room light is available, the picture should be max. 164 cm wide. The model is no longer offered by Zenith. It should also be noted that, unfortunately, there are no more replacement lamps for the projector, neither originals nor replicas.
Display Type	1 x 0,7 DLP Chip SVGA 4/3 Ti Digital Light Processing Chip
Ansi-Lumen	Projector: 800 / Screen: 267 Lux (bei 200 cm Screen)
Contrast	Projector: 180:1 / 450:1 full on/off / Screen: 180:1 / 450:1 full on/off
Black Level	Projector: 4,4444 min. Lumen / Screen: 1.508 min. Lumen
Offset	-
Resolution	SVGA 800 x 600 480.000 Pixel XGA 1024 x 768 compressed
Video Modes	NTSC M, PAL B/D/G/I/H/M, SECAM
Application	Standard-Portabel | External training and company presentations, as well as product presentations. Small screen width, rooms with very little ambient light below 100 lumens.
Light Source	150W UHP Lamp Articel Nr.: 35840320
Light Life	2000 h.
Operating Costs	-
Focus	Powered
Zoom	Powered 1,5
Objective	-
Throw Ratio	-
Audio	10W
Connections	1 x S-Video 1 x F/BAS DVI Eingang VGA nur über DVI EingangAntennen EingangCinch Stereo in und AusgangMini Jack in
Ceiling Mounting	Yes
Power	230W
Size WxHxD	133 x 234 x 368 mm (5,2"x9,2"x14,5") 11,45 L/dm³
Operating Noise	40dB
Weight	4,50 kg / 9,92 lbs.
Keystone	-
Illumination	-
Frequenz	H-sync: 15-60 kHz V-sync: 48-85 Hz
Foot-Lamberts	25 fL / max. 246 cm screen width 86 cd/m²

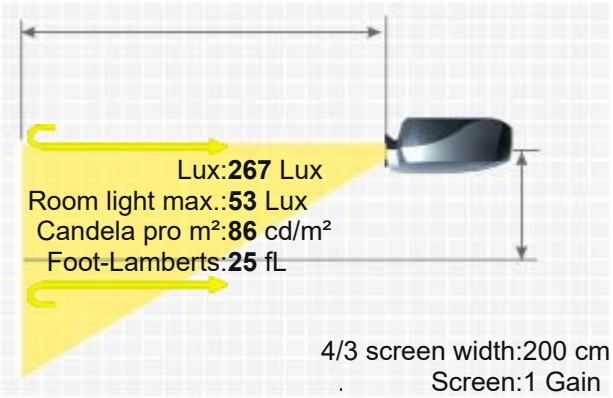

ZENITH DSV 100

Features	■ Remote control with laser pointer und mouse control ■ integrated TV tuner
Status	- Discontinued (EOL) // Last update of the data: 2023-08-04
Data	
More Details	https://www.projector-database.com/pro/zenithdsv100-en.html

Due to our ongoing commitment to continuously improve the quality of our projector database, this brochure is also subject to change without notice. HCinema is not responsible for any errors or omissions contained in product descriptions.